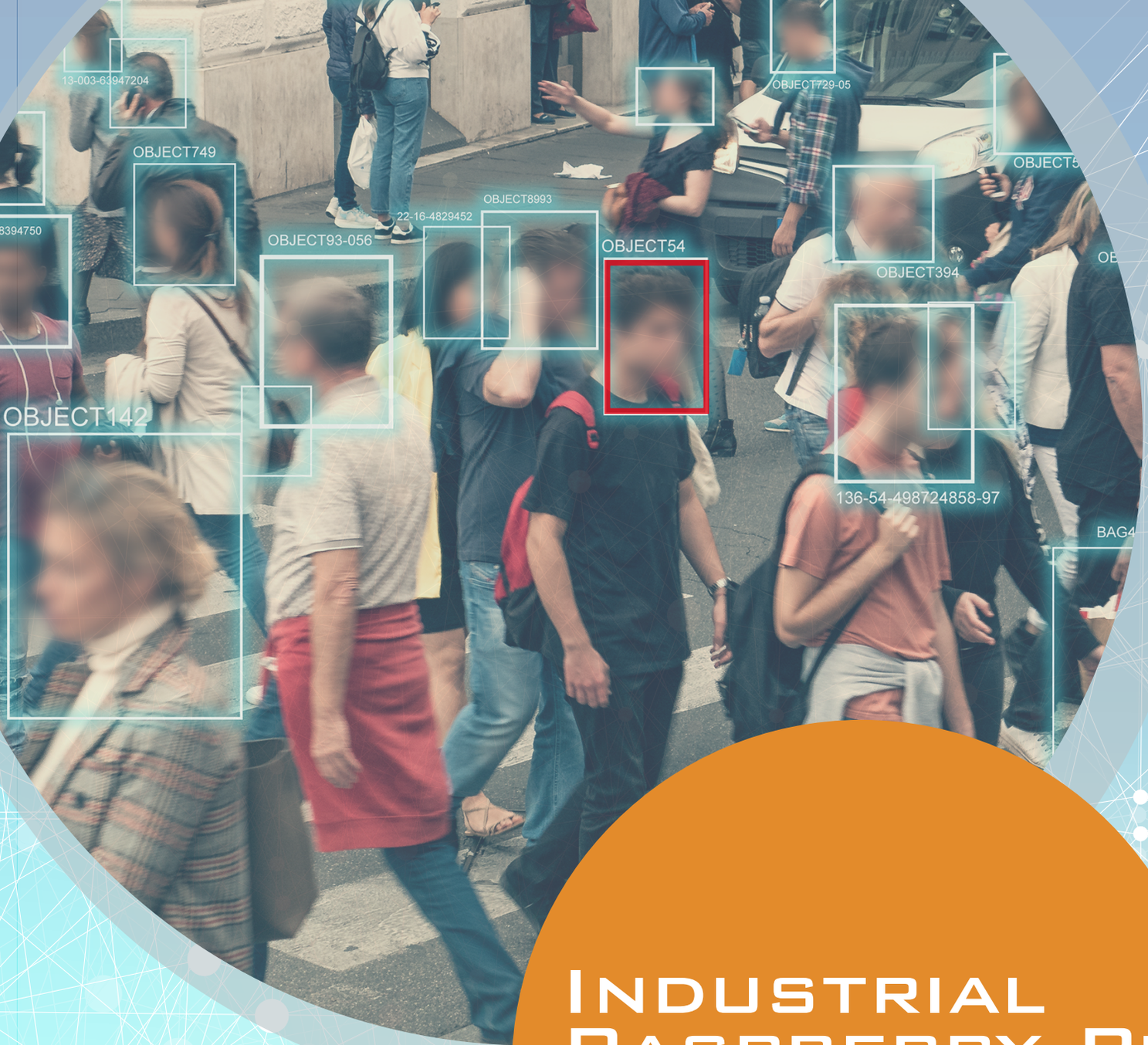

Industrial Raspberry Pi

R5 series VOL.1

Powered by Raspberry Pi

PiLink

Make a world first with the Industrial Raspberry Pi.
Visit us for more information at https://pilink.jp

Table of Contents

Table of Contents / Product List Table of Contents / Product List 1-2
Industrial Raspberry Pi PL-R5 Series Overview Table of Contents / Product List 3-4
Carry Board Details 5-6

PL-R5 Series (CM5-equipped/for general applications)

- PL-R5 BASE BOARD Board type 7-8
- PL-R5 BASIC IP20 Basic model (non-waterproof type) 9-10
- PL-R5 BASIC IP65 Basic model (dustproof and waterproof type) 11-12
- PL-R5 BASIC RJ Plus IP20 Digital input/output, analogue input (non-waterproof type) 13-14
- PL-R5 BASIC Plus IP65 Digital input/output, analogue input (waterproof type) 15-16
- PL-R5 BASIC M2 IP20 M.2 slots ×2 (non-waterproof type) 17-18
- PL-R5 USB IP20 USB x3 ports (non-waterproof type) 19-20
- PL-R5 USB IP65 USB x3 ports (dustproof and waterproof type) 21-22
- PL-R5 GPIO IP20 GPIO port equipped (non-waterproof type) 23-24
- PL-R5 USB GPIO IP20 USB x2 ports + GPIO ports included (non-waterproof type) 25-26
- PL-R5 DIO IP20 Digital input/output, COM, CAN (non-waterproof type) 27-28
- PL-R5 ISO-DIO IP20 Isolated digital input/output model (non-waterproof type) 29-30
- PL-R5 DIO CAN IP65 Digital Input/Output + CAN Model (waterproof Type) 31-32
- PL-R5 Multi IO IP20 For AGV control, etc.: Digital I/O, analogue I/O, COM, CAN, STM32 (non-waterproof type) 33-34

RFID products
PL-R4 RFID IP20 RFID Reader Model (non-waterproof Type) 35-36

Products for Fault Indication Monitoring
MEMS sensing, next-generation wireless sensing 37
- PL-R4 SENSOR For sensor connection (dustproof and waterproof type) 38
- USB wireless base station rPL-master 39
- Wireless Sensor Box for Accelerometer rPL-vibration 40
- Accelerometer sPL-ACC 41
- DC current sensor sPL-CUR 42

Accessories
Cable, installation adaptor, etc. 43

Previous models: 'PL-R4' and 'PL-R5M'

The PL-R series product line-up includes the PL-R4 equipped with CM4, and the PL-R5M featuring CM5 on the same carrier board as the PL-R4. Data sheets and catalogues are available on our website.

Download Page
https://pilink.jp/download/

Product Page
https://pilink.jp/product-category/industrial-raspberry-pi/

PL-R5 Series (for general applications)

P7
R5 Base Board

[P/N] 6WBS...

M.2 B-Key x1
Ai: 4ch
Di/Do: 2/2ch

LAN:2ch
SPE:1ch
USB 3.0: 1ch
PWR: 9...40VDC
OPT:RS-232/485/I2C
Display [maintenance]

P9
BASIC model

[P/N] Wired: 6RUN... / Wireless: 6WUN...

M.2 B-Key x1

LAN:2ch
SPE:1ch
USB 3.0: 1ch
PWR: 9...40VDC
OPT:RS-232/485/I2

P11
BASIC model
ip65

[P/N] Wired: 5RUN... / Wireless: 5WUN...

M.2 B-Key x1

LAN: 1ch
USB 3.0: 1ch
PWR: 9...40VDC
OPT:RS-232/485/I2
C

P13
BASIC Plus model

[P/N] Wired: 6RJP... / Wireless: 6WJP...

M.2 B-Key x1
Ai: 4ch
Di/Do: 2/2ch

LAN:3ch
SPE:1ch
USB 3.0: 1ch
PWR: 9...40VDC
OPT:RS-232/485/I2

P15
BASIC Plus model
ip65

[P/N] Wired: 5RBP... / Wireless: 5WBP...

M.2 B-Key x1
Ai: 4ch
Di/Do: 2/2ch

LAN: 1ch
USB 3.0: 1ch
PWR: 9...40VDC
OPT:RS-232/485/I2C

P17
M.2 x2 model

[P/N] Wired: 6RBM... / Wireless: 6WBM...

M.2 B-Key x2

LAN:2ch
SPE:1ch
USB 3.0: 1ch
PWR: 9...40VDC
OPT:RS-232/485/I2C
Display [maintenance]

P19
USB model

[P/N] Wired: 6RUB... / Wireless: 6WUB...

M.2 B-Key x1

LAN:2ch
SPE:1ch
USB : 3.0x1ch / 2.0x2ch
3.0x3ch[USB3 model]
PWR: 9...40VDC
OPT:RS-232/485/I2C
Display [maintenance]

P21
USB model
ip65

[P/N] Wired: 5RUB... / Wireless: ---

M.2 B-Key x1

LAN:1ch
USB: 3.0x1ch /
2.0x2ch
PWR: 9...40VDC
OPT:RS-232/485/I2C

P23
GPIO model

[P/N] Wired: 6RUG... / Wireless: 6WUG...

M.2 B-Key x1
GPIO: 12ch

LAN:2ch
SPE:1ch
USB 3.0: 1ch
PWR: 9...40VDC
OPT:RS-232/485/I2C
Display [maintenance]

P25
USB/GPIO model

[P/N] Wired: 6RUI... / Wireless: 6WUI...

M.2 B-Key x1
GPIO: 12ch

LAN:2ch
SPE:1ch
USB: 3.0x1ch / 2.0x1ch
PWR: 9...40VDC
OPT:RS-232/485/I2C
Display [maintenance]

P27
DIO model

[P/N] Wired: 6RJD... / Wireless: 6WJD...

M.2 B-Key x1
Di/Do: 16/8ch
CAN:2ch
COM:RS-232/485

LAN:2ch
SPE:1ch
USB 3.0: 1ch
PWR: 9...40VDC
OPT:RS-232/485/I2C
Display [maintenance]

P29
Isolation DIO model

[P/N] Wired: 6RIS... / Wireless: 6WIS...

M.2 B-Key x1
Di/Do: 16/8ch

LAN:2ch
SPE:1ch
USB 3.0: 1ch
PWR: 9...40VDC
OPT:RS-232/485/I2C
Display [maintenance]

P31
DIO CAN model
ip65

[P/N] Wired: 5RCD... / Wireless: 5WCD

M.2 B-Key x1
Di(PNP): 2ch
Do(PNP): 2ch
CAN: 2ch

LAN:1ch
USB: 3.0x1ch
PWR: 9...40VDC
OPT:RS-232/485/I2C

P33
Multi IO model
STM32

[P/N] Wired: 6RJI... / Wireless: 6WJI...

M.2 B-Key x1
Ai/Ao: 4/2ch
Di/Do:
16+4/8+2ch
CAN:2ch
COM:RS-232/485

LAN:2ch
SPE:1ch
USB 3.0: 1ch
PWR: 9...40VDC
OPT:RS-232/485/I2C
Display [maintenance]

For specific applications

P35
RFID model

RFID reader

[P/N] Wired: 2RRF... / Wireless: 2WRF...

M.2 B-Key x1
RFID antenna x2

LAN:2ch
SPE:1ch
USB 3.0: 1ch
PWR: 9...40VDC
OPT:RS-232/485/I2C
Display [maintenance]

P38
SENSOR model

Fault symptom detection

STM32

[P/N] 2RSNx000R331

M.2 B-Key x1
128GB SSD

Analog sensor
input: 4ch

LAN:2ch
SPE:1ch
USB 3.0: 1ch
PWR: 9...40VDC
OPT:RS-232/485/I2C
Display [maintenance]

Industrial Raspberry Pi

Superior environmental resistance and reliability

• Raspberry Pi suitable for long-term operation in the field
When deploying Raspberry Pi units in industrial settings such as factories, durability and reliability present significant challenges. While heat is the root cause of many malfunctions and failures, the PL-R series employs a proprietary heat dissipation mechanism where the entire enclosure functions as a heat sink, delivering highly effective cooling.
Temperature cycle testing from -40°C to 90°C and thermal shock testing have been conducted. Even the PL-R5, equipped with the CM5 which is said to generate increased heat, operates stably across both low and high temperature environments. Resistant to vibration, shock, and noise, it can be used with confidence even in harsh field conditions. The IP65 waterproof type can be installed directly outdoors or in similar locations without requiring a control panel.

•Industrial Design and Reliability
The PL-R series employs industrial-grade components even for peripheral parts around the core, featuring a DC24V power supply, hardware watchdog, and security IC, designed specifically for field deployment.

While standard Raspberry Pi units store the OS image on an SD card, this often poses a bottleneck for field deployment due to concerns over durability and reliability. Conversely, the PL-R series writes the image to the onboard eMMC (or SSD) on the Compute Module, eliminating the need for a boot SD card. This avoids the risks associated with SD card removal or data loss.

Custom design and expansion boards

• A structure combining the carrier board and expansion board internally
The PL-R series features a unique structure where two boards—a carrier board (right side) implementing the Raspberry Pi Compute Module and a custom expansion board (left side)—are connected within the enclosure. The custom boards include options for expanding I/O or implementing high-performance STM32 microcontrollers. You can select the optimal model from our lineup, equipped with the necessary interfaces tailored to the connected equipment, devices, and communication requirements.
Models incorporating an additional microcontroller via the custom board can also handle applications such as AD conversion of sensor values, high-speed sampling, and motor drive control.

• Customisation
We also undertake the development of custom boards tailored to your specific requirements at a low initial cost. Should you wish to add interfaces or functions not found in our existing models, please do not hesitate to consult with us.

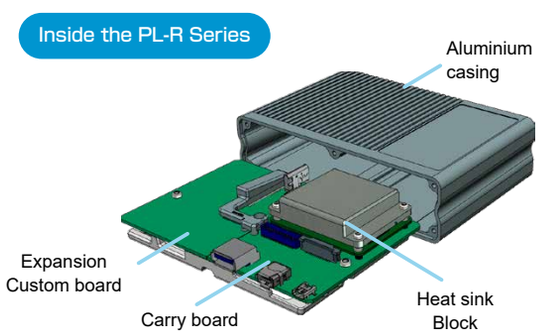

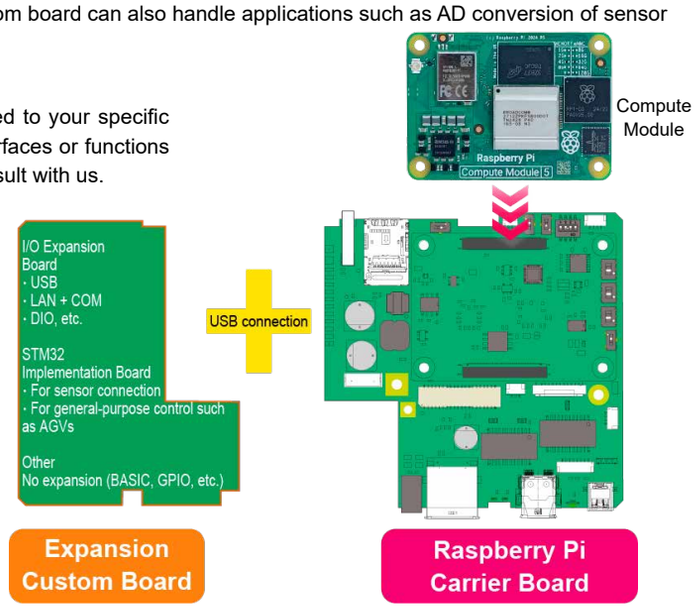

Easily from the development environment to the field

• Leveraging the assets of standard Raspberry Pi units in the field
The Compute Module installed in the PL-R series features the same core components as a standard Raspberry Pi, including the CPU and memory. Like a standard Raspberry Pi, it runs on Raspberry Pi OS, and programmes, libraries, and devices such as cameras and sensors that operate on a standard Raspberry Pi will generally function similarly on the PL-R series. This facilitates straightforward deployment from the development environment to the field.

The PL-R5, equipped with CM5, expands the application scope of Raspberry Pi by combining CM5's performance with the PL-R5's expandability. This enables AI image recognition utilising the next-generation NPU HAILO, which pairs exceptionally well with Raspberry Pi.

Overview of the PL-R5

The latest model in the PL-R series

Powered by Raspberry Pi

• Equipped with Compute Module 5 (CM5)
The PL-R5 is the latest model in the PL-R series, offering full compatibility with the Raspberry Pi Compute Module 5 (CM5).
The CM5 delivers up to four times the processing speed compared to the CM4. Equipped with the CM5, the PL-R5 offers improvements over the previous PL-R4 in performance, expandability, and power efficiency.

•Compatible with USB 3.0, Gigabit LAN, WiFi/Bluetooth, and LTE
USB 3.0 compatible, both standard and waterproof types feature Gigabit Ethernet. Standard specification includes eMMC 64GB/RAM 8GB (double the previous capacity). The standard type also implements SPE (Single Pair Ethernet 10BASE-T1S).

•M.2 Slot Expansion — HAILO, High-Capacity SSD, LTE
The M.2 slot on the rear of the carrier board also allows for the addition of an AI accelerator (HAILO-8L), NVMe storage (high-capacity SSD), or WWAN (LTE).

• We can also provide circuit boards for embedded systems.
The PL-R5 is available both as a complete unit with housing and as a bare board type without housing.
We offer flexible solutions for customers prioritising design freedom, including integration into customer-specific enclosures, development for incorporation into existing equipment, and adoption for OEM products.

PL-R5 DIO CAN IP65 [Waterproof Type]]
Di/Do/CAN: 2/2/2ch

PL-R5 BASIC M2 IP20 [Standard Type]
M.2 slots ×2
Supports simultaneous LTE and Hailo implementation

Board type

PL-R5 BASE BOARD

M.2 slot

Carry board rear side
1 slot

Only the BASIC M2 model features an M.2 x1 slot on the expansion board.
(Total M.2 slots: 2)

Single Pair Ethernet (SPE) T1S compliant

* Single-pair Ethernet port implemented in IP20 type

Single Pair Ethernet (SPE) is an Ethernet technology enabling communication over a single pair (two wires). It is primarily used for reducing wiring and saving space in industrial equipment and IoT devices. Its features include a maximum communication speed of 1Gbps, the capability for long-distance communication, and a highly compact design, making it suitable for sensor connections, communication with control devices, and in-vehicle networks. The SPE in the PL-R5 complies with the T1S (10BASE-T1S) standard and supports multi-drop connections, enabling up to eight nodes to be connected. It provides a communication foundation that balances reliability and ease of installation for embedded use in space-constrained equipment such as articulated robots and AGVs/AMRs, and for device coordination, remote monitoring, operational data collection, and maintenance in field environments where communication infrastructure poses challenges.

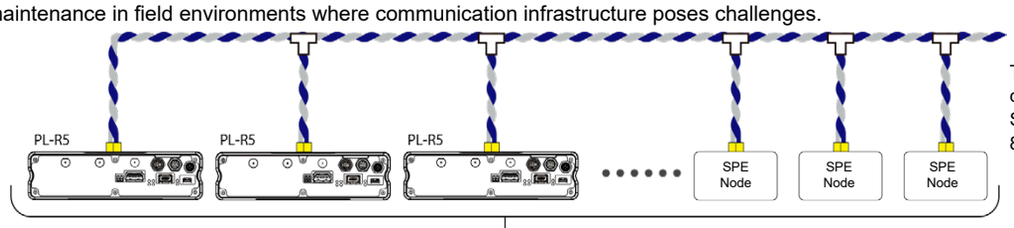

T-branch or multi-drop configuration
Supports connection of up to 8 nodes

Comparison with conventional products

Comparison	PL-R4（Conventional products）	PL-R5(New Product)
Compute Module	CM4	CM5
Processor	Cortex-A72	Cortex-A76
Clock	1.5GHz	2.4GHz
RAM	4GB(Standard)/8GB	8GB(Standard)/16GB
On-board eMMC	32GB	64GB
USB type	USB 2.0	USB3.0
LAN*	1×100Mbit 1×Gigabit	2×Gigabit 1×SPE
WLAN/BT	Response	Response
Raspberry Pi OS	Bullseye	Bookworm, Trixie

*IP20 type comparison

PL-R5 USB IP20 [Standard Type]

Carrier Board Details (Enclosed type)

Featuring an external watchdog IC

Features an external WD IC distinct from the internal WD ICs used in standard Raspberry Pi models
Ensures reliable system operation!

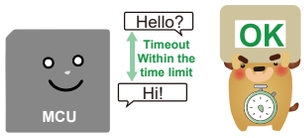

Battery-backed RTC

Even when the power is switched off, the clock data is backed up by the battery.

Low Battery Voltage Detection

Detects low voltage (2.7V) in coin batteries
Makes it easy to know when to replace the batteries

SD memory card (non-boot)

microSD slot
for data storage

The PL-R5 Series Industrial Raspberry Pi enables the use of MicroSD cards as user data storage by placing the system on internal eMMC or SSD.

Enclosed type Carryboard

◀ Front side / Reverse side ▶

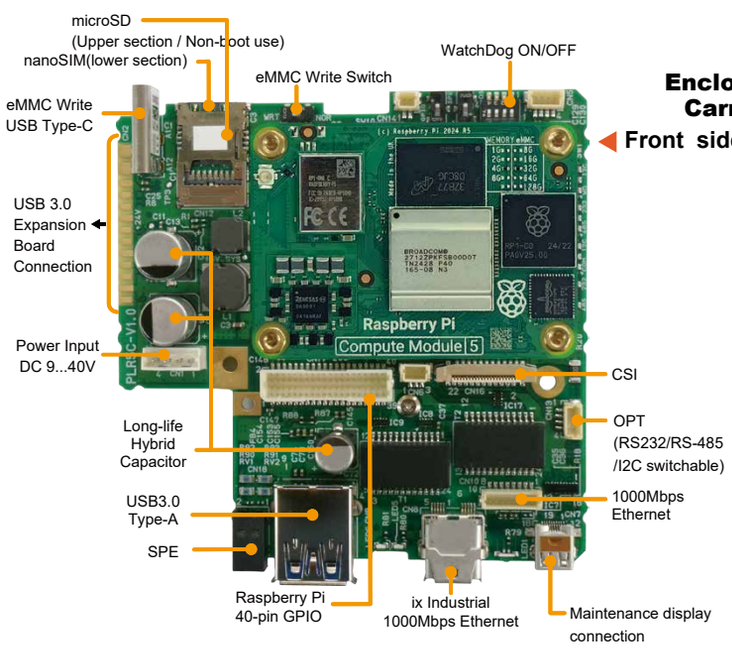

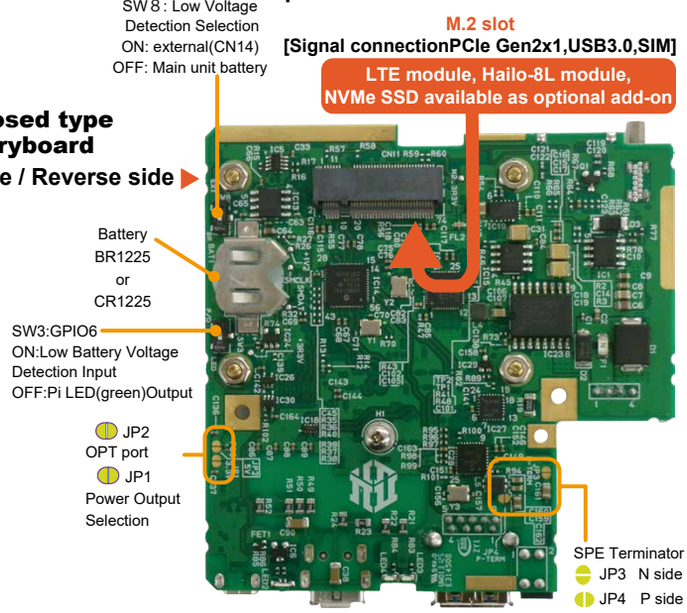

USB3.0

The PL-R5 supports USB 3.0 across all models.
The USB3 model can also support USB 3.0 × 3ports.

Gigabit LAN + SPE

1000Mbps × 2
SPE [Single-pair Ethernet] T1S × 1

Raspberry Pi GPIO

Features a 40-pin connector compatible with standard Raspberry Pi pins
Supports various SPI/I2C expansions!

RasPi GPIO40pin (Same pinout as the Raspberry Pi 40-pin header BM40B-SRDS-G-TF)

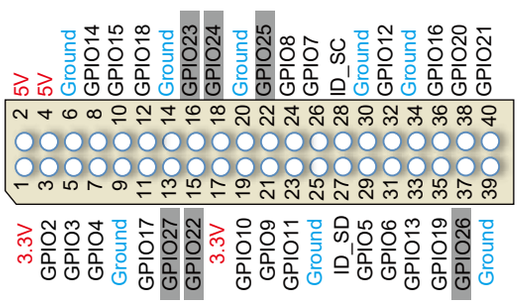

Serial communication

Connects to various peripheral devices such as RS232C, RS485, and I2C!

CSI camera

Compatible with a wide range of camera modules!

Using an AI camera enables on-board support for various neural network models without placing a load on the Raspberry Pi itself

AI camera

Raspberry Pi Camera Module / Raspberry Pi Foundation
Camera V2/SC0023/ IMX219, 8MP/-20~60°C
Camera V2 NOIR/SC0024/ IMX219, 8MP/-20~60°C
Camera V3/SC0872/ IMX708, 11.9MP/0~50°C
Camera V3 NOIR/SC0873/ IMX708, 11.9MP/0~50°C
Camera V3 Wide/SC0874/ IMX708, 11.9MP/0~50°C
Camera V3 Wide NoIR/SC0875/ IMX708, 11.9MP/0~50°C
High Quality Camera/SC0261/ IMX477, 12.3MP/0~50°C
Global Shutter Camera/SC0715/IMX296,1.58MP/0~50°C
AI Camera/SC1174/IMX500,12.3MP/0~50°C

Security chip incorporated

Supports encryption and secure boot

Cryptographic Coprocessor
ATECC608B/Microchip Technology Inc.

M.2 Slot Expansion

4G/LTE communication module

Industrial-grade IoT modules

EM7431 /Sierra Wireless

4G LTE	Category: Cat-7 Band: B1/3/5/8/18/19/39/B41/B42/B43
3G	HSPA+: B1/5/6/19
Supported carriers	NTT Docomo, KDDI, Softbank
GNSS	Galileo, Glonass, GPS, BeiDou
Operating temperature	-40...85˚C

EC25J / Quectel

Mini PCIe modules can also be implemented using a conversion adapter.

4G LTE	Category: Cat-4 Band: B1/B3/B8/B18/B19/B26/B41
3G	HSPA+: B1/B5/B6/B8/B19
Supported carriers	NTT Docomo, KDDI, Softbank
GNSS	GPS, GLONASS, BeiDou, Galileo, QZSS
Operating temperature	-40...85˚C

High-capacity SSD

NVMe, which is significantly faster than SATA, is now available!

PCIe 2242 M.2 SSD (B+M key)
MTE460T model/Transcend Inc.
Temperature range -20...75˚C *

128GB	TS128GMTE460T-VS1
256GB	TS256GMTE460T-VS1
512GB	TS512GMTE460T-VS1
1TB	TS1TMTE460T-VS1

PCIe 2230 M.2 SSD (M key)
MTE370T model/Transcend Inc.
Temperature range -20...75˚C*

256GB	TS256GMTE370T-VS1
512GB	TS512GMTE370T-VS1
1TB	TS1TMTE370T-VS1

M.2 M key type

By using a key conversion adapter it can be installed

AI accelerator (NPU)

Delivering up to 26 TOPS* of AI processing performance

Perfect compatibility with Raspberry Pi! Accelerate deep learning models

Hailo-8L Module HM21LB1C2LAE
M.2 Key B+M 2280 Extended Temperature
*Maximum13TOPS

Hailo-8 Module HM218B1C2LAE
M.2 Key B+M 2280 Extended Temperature
*Maximum26TOPS

PL-R5 PCB type [w/o enclosure]

A PCB type offering greater design flexibility has arrived

This model is provided as a bare board without an enclosure. It is designed for integration into customer-specific housings, OEM products, or other embedded applications.

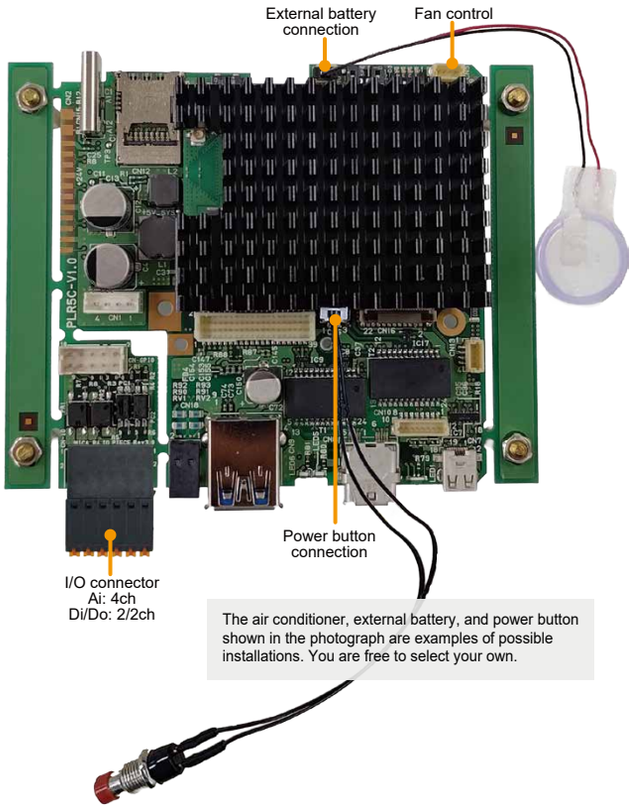

The air conditioner, external battery, and power button shown in the photograph are examples of possible installations. You are free to select your own.

Various coolers and cooling fans

Compatible with passive coolers and active fans for CM5

Passive coolers provide sufficient thermal performance for most use cases.
For applications requiring forced-air cooling, active fan options are also available.

Passive cooler
① Raspberry Pi Foundation: SC1752
② Geekworm: C519 V1.0

Active fan
③ EDA: ED-CM5ACOOLER
④ WAVESHARE: CM5-FAN-3007-5V

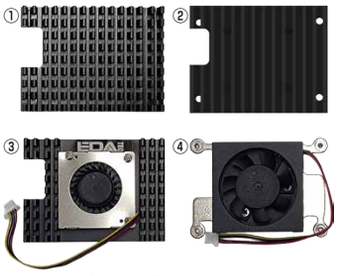

Battery selection

The RTC battery can utilise either an internal implementation or an external battery.

External batteries also support low voltage detection (2.7V)

Internal battery
BR1225 or CR1225
[sold separately]

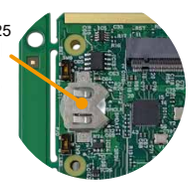

Power button

A physical button can be installed to switch to sleep mode without requiring command input.

M.2 slot expansion

Similar to the chassis-mounted type, it supports the implementation of high-capacity SSDs, LTE, and Hailo.

PL-R5 BASE BOARD

Picture

Features

-Industrial Raspberry Pi (CM5)
-Wide power input range: DC 9V to 40V
-Components selected for wide temperature range and high noise immunity
-Vibration-resistant connectors with high connection reliability
-Supports CM5 standard passive or active coolers
-Equipped with 2 GLAN ports and SPE (Single Pair Ethernet)
-USB 3.0 Type-A and internal bus USB 3.0 ports
-Onboard eMMC eliminates need for boot SD memory
-microSD slot for data storage
-Internal M.2 slot supports SSD or WWAN expansion
-Raspi40p connector for expansion boards
-Battery-backed RTC and external power input capability
-Highly reliable hardware watchdog

Product Specifications

Processor		Broadcom BCM2712, Quad core-A76 @ 2.4GHz
Memory		RAM8GB, eMMC64GB (Depend on model)
OS		Raspberry Pi OS
Interface	Front	1x PWR : Power input, 2-line 2x LAN : GLAN[1000Mbps] x2ch 1x SPE : 10BASE-T1S x1ch 1x OPT : i2c/RS-232/485 selectable 1x USB : USB3.0 host Type-A 1x IO : 2 digital inputs (optocoupler input, DC5V-24V) 2 digital outputs (optorelay output, DC48V Max 400mA:25℃/Max 250mA:60℃) Ai4 points (Non-isolated, 16-bit resolution, Max 860SPS) 0-5V/0-10V (100V) selectable 1x Maintenance: Maintenance Display port(Reserved) [Option]1x WLAN IEEE 802.11 b/g/n/ac Bluetooth 5.0, BLE [Option]1x LTE(M.2 slot EM7431)
	Back	1x USB-C : USB Type-C(for eMMC writing) 1x SW : eMMC writing switch 1x microSD : microSD slot, 1x nanoSIM slot
	Inter nal	1x M.2 slot B-key* 1x CSI, 1xGPIO 40p, 1xFAN, 1x BAT, 1x SW
LED		P: Power status, A0,1: LAN status, Pi: User custom/ WD error, EM: eMMC acces, M2: M2 access
RTC/NVRAM		BR1225[CR1225] Backup RTC (sold separately)
Watchdog		Built-in hardware watchdog
Power		Power supply input: DC 9V to 40V / Approx. 15W (including USB)
Temperature		Operating : -20～60℃ , Storage : -25～85 ℃
Humidity		Operating : 0～95%(non-condensing)
Dimensions		W100 x D79.7mm (excluding protrusions)
Weight		Approx. 50g
Vibration/shock*		IEC 60068-2-6 / IEC 60068-2-27
EMI		Radiated emissions EN55016-2-3
EMS		Electrostatic radiation immunity EN 61000-4-2
		Radio frequency electromagnetic fields EN 61000-4-3
		Fast transient burst EN 61000-4-4

* Not full pin connection. USB3.0, PCIe, SIM are connected.
* With enclosure for testing and certification.

Dimensions and installation adapter

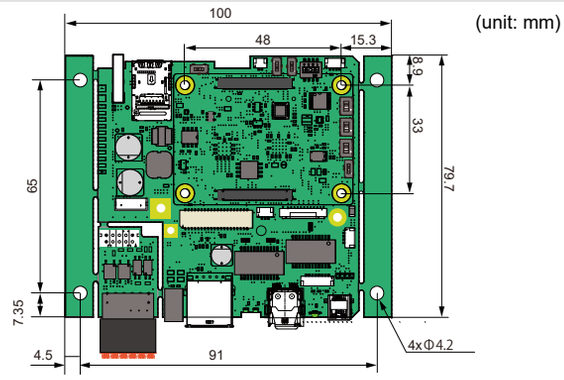

Connection example

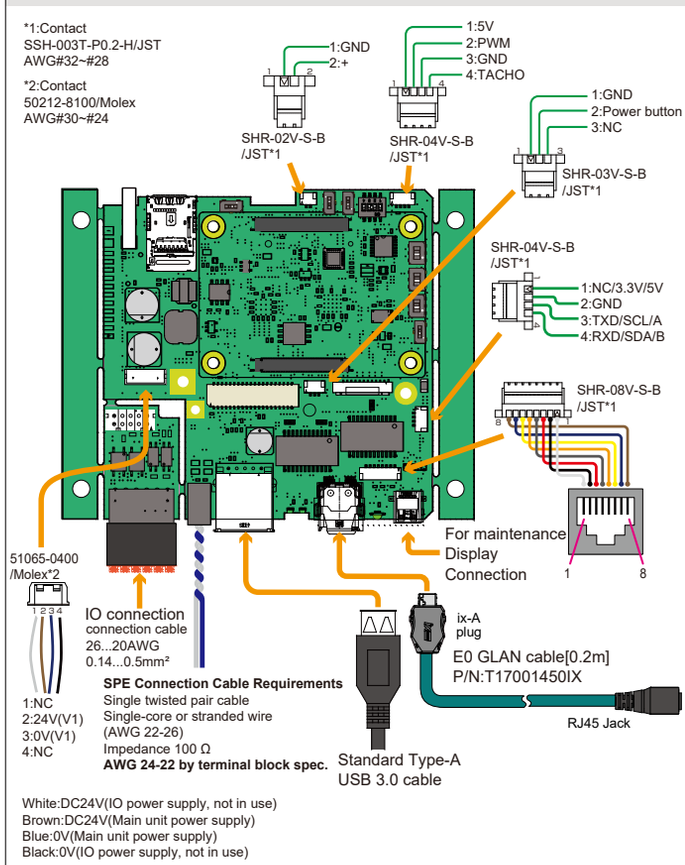

Ordering information

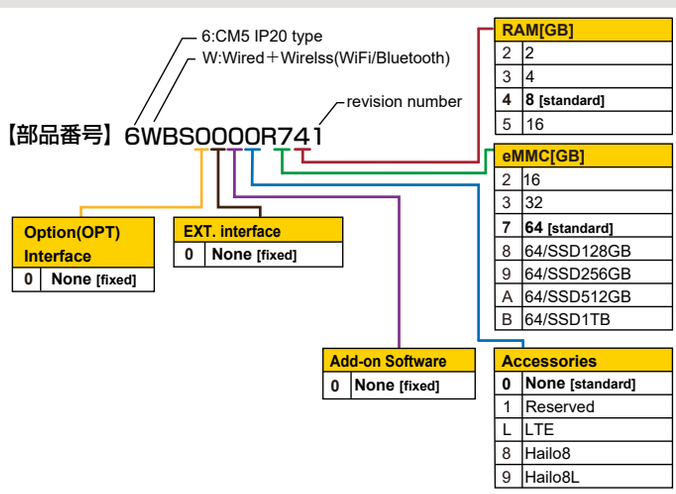

All data given are in line with the actual state of art and therefore not binding.
PiLink reserves the right to modify designs without giving the relevant reasons.

PL-R5 BASE BOARD

Internal datails

•GPIO Function List

GPIO	Changeable	Fnction Setting	Function								
			a0	a1	a2	a3	a4	a5	a6	a7	a8
0	No	CAM_GPIO0	SPI0_SIO[3]	DPI_PCLK	UART1_TX	I2C0_SDA		SYS_RIO[0]	PROC_RIO[0]	PIO[0]	SPI2_CSn[0]
1	No	CAM_GPIO1	SPI0_SIO[2]	DPI_DE	UART1_RX	I2C0_SCL		SYS_RIO[1]	PROC_RIO[1]	PIO[1]	SPI2_SIO[1]
2	No	I2C1_SDA	SPI0_CSn[3]	DPI_VSYNC	UART1_CTS	I2C1_SDA	UART0_IR_RX	SYS_RIO[2]	PROC_RIO[2]	PIO[2]	SPI2_SIO[0]
3	No	I2C1_SCL	SPI0_CSn[2]	DPI_HSYNC	UART1_RTS	I2C1_SCL	UART0_IR_TX	SYS_RIO[3]	PROC_RIO[3]	PIO[3]	SPI2_SCLK
4	Yes		GPCLK[0]	DPI_D[0]	UART2_TX	I2C2_SDA	UART0_RI	SYS_RIO[4]	PROC_RIO[4]	PIO[4]	SPI3_CSn[0]
5	Yes	SPE_IRQ	GPCLK[1]	DPI_D[1]	UART2_RX	I2C2_SCL	UART0_DTR	SYS_RIO[5]	PROC_RIO[5]	PIO[5]	SPI3_SIO[1]
6	Yes	Pi LED or BAT Low	GPCLK[2]	DPI_D[2]	UART2_CTS	I2C3_SDA	UART0_DCD	SYS_RIO[6]	PROC_RIO[6]	PIO[6]	SPI3_SIO[0]
7	Yes		SPI0_CSn[1]	DPI_D[3]	UART2_RTS	I2C3_SCL	UART0_DSR	SYS_RIO[7]	PROC_RIO[7]	PIO[7]	SPI3_SCLK
8	Yes	SPE_SPI0_CS0	SPI0_CSn[0]	DPI_D[4]	UART3_TX	I2C0_SDA		SYS_RIO[8]	PROC_RIO[8]	PIO[8]	SPI4_CSn[0]
9	Yes	SPE_SPI0_MISO	SPI0_SIO[1]	DPI_D[5]	UART3_RX	I2C0_SCL		SYS_RIO[9]	PROC_RIO[9]	PIO[9]	SPI4_MISO
10	Yes	SPE_SPI0_MOSI	SPI0_SIO[0]	DPI_D[6]	UART3_CTS	I2C1_SDA		SYS_RIO[10]	PROC_RIO[10]	PIO[10]	SPI4_MOSI
11	Yes	SPE_SPI0_SCLK	SPI0_SCLK	DPI_D[7]	UART3_RTS	I2C1_SCL		SYS_RIO[11]	PROC_RIO[11]	PIO[11]	SPI4_SCLK
12	Yes	GPIO for Exp. Board	PWM0[0]	DPI_D[8]	UART4_TX	I2C2_SDA	AUDIO_OUT_L	SYS_RIO[12]	PROC_RIO[12]	PIO[12]	SPI5_CSn[0]
13	Yes		PWM0[1]	DPI_D[9]	UART4_RX	I2C2_SCL	AUDIO_OUT_R	SYS_RIO[13]	PROC_RIO[13]	PIO[13]	SPI5_SIO[1]
14	Yes		PWM0[2]	DPI_D[10]	UART4_CTS	I2C3_SDA	UART0_TX	SYS_RIO[14]	PROC_RIO[14]	PIO[14]	SPI5_SIO[0]
15	Yes		PWM0[3]	DPI_D[11]	UART4_RTS	I2C3_SCL	UART0_RX	SYS_RIO[15]	PROC_RIO[15]	PIO[15]	SPI5_SCLK
16	Yes		SPI1_CSn[2]	DPI_D[12]			UART0_CTS	SYS_RIO[16]	PROC_RIO[16]	PIO[16]	
17	Yes		SPI1_CSn[1]	DPI_D[13]			UART0_RTS	SYS_RIO[17]	PROC_RIO[17]	PIO[17]	
18	Yes		SPI1_CSn[0]	DPI_D[14]	I2S0_SCLK	PWM0[2]	I2S1_SCLK	SYS_RIO[18]	PROC_RIO[18]	PIO[18]	GPCLK[1]
19	Yes		SPI1_SIO[1]	DPI_D[15]	I2S0_WS	PWM0[3]	I2S1_WS	SYS_RIO[19]	PROC_RIO[19]	PIO[19]	
20	Yes		SPI1_SIO[0]	DPI_D[16]	I2S0_SDI[0]	GPCLK[0]	I2S1_SDI[0]	SYS_RIO[20]	PROC_RIO[20]	PIO[20]	
21	Yes		SPI1_SCLK	DPI_D[17]	I2S0_SDO[0]	GPCLK[1]	I2S1_SDO[0]	SYS_RIO[21]	PROC_RIO[21]	PIO[21]	
22	No	SD0	SDIO0_CLK	DPI_D[18]	I2S0_SDI[1]	I2C3_SDA	I2S1_SDI[1]	SYS_RIO[22]	PROC_RIO[22]	PIO[22]	
23	No	SD0	SDIO0_CMD	DPI_D[19]	I2S0_SDO[1]	I2C3_SCL	I2S1_SDO[1]	SYS_RIO[23]	PROC_RIO[23]	PIO[23]	
24	No	SD0	SDIO0_DAT[0]	DPI_D[20]	I2S0_SDI[2]		I2S1_SDI[2]	SYS_RIO[24]	PROC_RIO[24]	PIO[24]	SPI2_CSn[1]
25	No	SD0	SDIO0_DAT[1]	DPI_D[21]	I2S0_SDO[2]	AUDIO_IN_CLK	I2S1_SDO[2]	SYS_RIO[25]	PROC_RIO[25]	PIO[25]	SPI3_CSn[1]
26	No	SD0	SDIO0_DAT[2]	DPI_D[22]	I2S0_SDI[3]	AUDIO_IN_DAT0	I2S1_SDI[3]	SYS_RIO[26]	PROC_RIO[26]	PIO[26]	SPI5_CSn[1]
27	No	SD0	SDIO0_DAT[3]	DPI_D[23]	I2S0_SDO[3]	AUDIO_IN_DAT1	I2S1_SDO[3]	SYS_RIO[27]	PROC_RIO[27]	PIO[27]	SPI1_CSn[1]
38	No	I2C0_SDA									
39	No	I2C0_SCL									

•Top

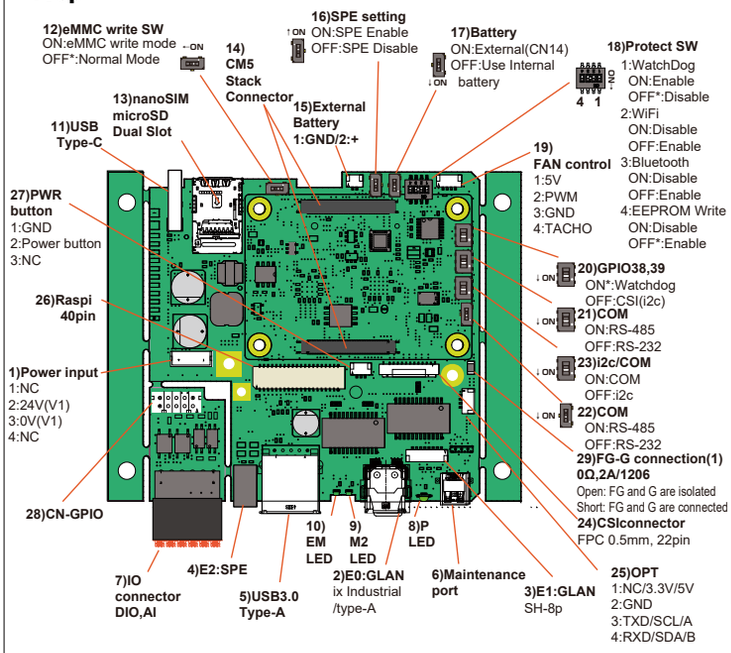

No.	Name	Symbol	Details
1)	Power input connector	CN1	Power input connector 53253-0470/Molex
2)	E0 GLAN connector	CN8	E0 ix connector IEC 61076-3-124
3)	E1 GLAN connector	CN10	E1 SH connector BM08B-SRSS-TB/JST
4)	E2 SPE	CN18	E2 connector1770885/Phoenix Contact
5)	USB3.0 connector	CN9	USB 3.0 Host Type-A
6)	Maintenance port	CN7	For display purposes connector
7)	IO connector	CN-IO	IO connector terminal block
8)	P LED	LED1	Power indicator LED [green/red]
9)	M2 LED	LED5	M2 Access LED [Green]
10)	EM LED	LED6	eMMC Access LED [Green]
11)	USB Type-C	CN15	USB Type-C connector for eMMC writing
12)	eMMC write SW	SW2	eMMC Write Switch
13)	Dual Slot	CN12	microSD card and nanoSIM for secondary data storage
14)	CM5Stack Connector	CN3,4	CM5 mounting connector
15)	External Battery	CN14	External battery connector BM02B-SRSS-TB/JST
16)	SPE setting SW	SW10	GPIO5,8,9,10,11 Switching for SPE or standard GPIO
17)	Battery selection SW	SW6	Battery switch
18)	Protect SW	SW9	Watchdog and wireless function protection switch
19)	FAN control Connector	CN5	Active Fan Connection Connector for CM5
20)	GPIO38,39	SW1	GPIO38,39 WD or CSI I2C switch
21)	COM SW1	SW5	OPT Port Switch RS-232/RS-485
22)	COM SW 2	SW4	OPT Port Switch RS-232/RS-485
23)	I2C/COM	SW7	OPT Port Switch I2C/RS-232,485
24)	CSIConnector	CN16	Camera connector 0525592253/Molex
25)	OPTConnector	CN13	OPT port connector BM04B-SRSS-TB/JST
26)	Raspi 40pin	CN17	Raspberry Pi-compliant 40p BM40B-SRDS-G-TF/JST
27)	PWR button	CN6	Power control connector BM03B-SRSS-TB/JST
28)	CN-IO Connector	CN-IO	Terminal block connectors for DI, DO, and AI
29)	FG-G connection resistor	R20	FG-GND connection resistor

•Bottom

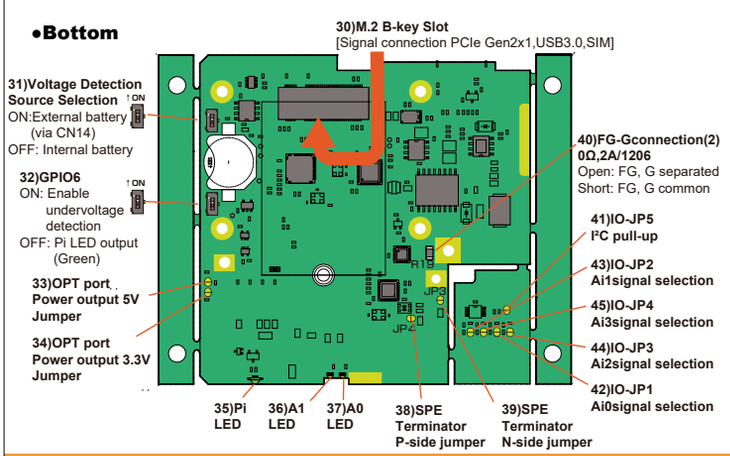

No.	Name	Symbol	Details
30)	M.2 B-key Slot	CN11	M.2 connectors compatible with LTE, SSD, and Hailo
31)	Voltage Detection Selection	SW8	Battery Voltage Check Selection
32)	GPIO6	SW3	Battery voltage input or Pi LED output selection
33)	OPT port power output 5V jumper	JP2	5V power output jumper for OPT port
34)	OPT port power output 3.3V jumper	JP1	3.3V power output jumper for OPT port
35)	Pi LED	Pi LED	User-programmable [Green]/WD error [Red]
36)	A1LED	LED4	E1 Access LED [Orange]
37)	A0 LED	LED3	E0 Access LED [Orange]
38)	SPE Terminator P-side Jumper	JP4	SPE P-side terminator jumper
39)	SPE Terminator N-side Jumper	JP3	SPE N-side terminator jumper
40)	FG-Gconnection(2)0Ω,2A/1206	R19	FG-GND connection resistor
41)	IO-JP5 I²C pull-up	IO-JP5	Always open
42)	IO-JP1 Ai0signal selection	IO-JP1	Ai0 Jumper 0-10V [Open]/0-5V [Short]
43)	IO-JP2 Ai1signal selection	IO-JP2	Ai1 Jumper 0-10V [Open]/0-5V [Short]
44)	IO-JP3 Ai2signal selection	IO-JP3	Ai3 Jumper 0-10V [Open]/0-5V [Short]
45)	IO-JP4 Ai3signal selection	IO-JP4	Ai0 Jumper 0-100V [Open]/0-5V [Short]

All data given are in line with the actual state of art and therefore not binding.
PiLink reserves the right to modify designs without giving the relevant reasons.

PL-R5 BASIC IP20

Picture

Features

-Industrial Raspberry Pi 5 (CM5)
-Wide power input DC9V to 40V
-Wide temperature range and high noise resistance
-Vibration-resistant, highly reliable M8 and M5, iX connectors
-Robust aluminum die-cast housing
-2 GLAN port and SPE (Single Pair Ethernet)
-USB 3.0 Type-A and USB 3.0 for internal bus
-Onboard eMMC, no SD memory is used for boot
-microSD slot for data storage
-Internal M.2 slot for SSD and WWAN expansion
-Raspi40p connector for expansion boards
-Battery-backed RTC
-Reliable hardware watchdog
-Wall mount and DIN rail mount

Product Specifications

Processor		Broadcom BCM2712, Quad core-A76 @ 2.4GHz
Memory		RAM8GB, eMMC64GB (Depend on model)
OS		Raspberry Pi OS
Interface	Front	1x PWR : Power input, 2-line 2x LAN : GLAN[1000Mbps] x2ch 1x SPE : 10BASE-T1S x1ch 1x OPT : i2c/RS-232/485 selectable 1x USB : USB3.0 host Type-A 1x Maintenance: Maintenance Display port(Reserved) [Option]1x WLAN IEEE 802.11 b/g/n/ac Bluetooth 5.0, BLE [Option]1x LTE(M.2 slot EM7431)
	Back	1x USB-C :USB Type-C(for eMMC writing) 1x SW :eMMC writing switch 1x microSD :microSD slot, 1x nanoSIM slot
	Inter nal	1x M.2 slot B-key* 1x CSI, 1xGPIO 40p, 1xFAN, 1x BAT, 1x SW
LED		P: Power status, A0,1:LAN status, Pi:User custom/ WD error, EM:eMMC acces, M2:M2 access
RTC/NVRAM		BR1225[CR1225] Backup RTC
Watchdog		Built-in hardware watchdog
Power		Power rating DC12/24V, Range DC9V～40V/approx.15W
Temperature		Operating : -20～60 ℃, Storage : -25～85 ℃
Humidity		Operating : 0～95%(non-condensing)
IP grade		IP20
housing		Aluminum powder coating
Dimensions		W132 x D87 x H35 mm (excluding protrusions)
Weight		Approx. 530g
Vibration/shock		IEC 60068-2-6 / IEC 60068-2-27
EMI		Radiated emissions EN55016-2-3
EMS		Electrostatic radiation immunity EN 61000-4-2
		Radio frequency electromagnetic fields EN 61000-4-3
		Fast transient burst EN 61000-4-4
Installation		DIN rail mounting, wall mounting(Option)

* Not full pin connection. USB3.0, PCIe, SIM are connected.

Interface

<Connector pin layout>

PWR connector

M8 A-coded
4pin Male

Pin	Col.	Signal
1	BR	24VDC(V1)
2	WH	24VDC(V2)
3	BL	0V(V1)
4	BK	0V(V2)

V1: Main unit power supply,
V2: IO power supply (not used by this unit)

OPT connector

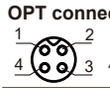

M5 A-code
4pin Female

Pin	Col.	i2c	RS232	RS485
1	BR	3.3V/5V/none*		
2	WH	SCL	TXD	A
3	BL	0V(RS232:SG		
4	BK	SDA	RXD	B

*1 pin for power output is no output by default.

E0 connector [GLAN]

ix type-A
Jack

Pin	Signal 10/100M	Signal 1G
1	TX+	BI_DA+
2	TX-	BI_DA-
3	N.C.	GND
4	N.C.	BI_DC+
5	N.C.	BI_DC-
6	RX+	BI_DB+
7	RX-	BI_DB-
8	N.C.	GND
9	N.C.	BI_DD+
10	N.C.	BI_DD-

LED

LED	Sts.	Comments
P(GR)	Off	Power Down
	On	Power OK
P(RD)	Off	Power status OK
	Blk	Power status NG
	On	Starting, stopping
A0(OR)	Blk	E0 active
A1(OR)	Blk	E1 active
Pi(RD)	Off	WD OK
	On	WD error
Pi(GR)	Off	User OFF
	On	User ON
EM(GR)	Off	eMMC acces
	On	status
M2(GR)	Off	M2 acces
	On	status

E1 connector [GLAN]

M8 A-coded
8pin Female

Pin	Col.	Signal
1	WH/OR	TR0P
2	OR	TR0N
3	WH/GR	TR1P
4	BL	TR2P
5	WH/BL	TR2N
6	GR	TR1N
7	WH/BR	TR3P
8	BR	TR3N

E2 connector [SPE]

Twisted pair cable
24...22AWG
0.2...0.33mm²
Impedance 100Ω

Spring-type
terminal block

CSI[Internal]

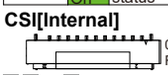

0.5mm pitch 22-pole
FPC connector

GPIO[Internal]

RasPi GPIO40pin
(Same layout as
Raspi 40-pin connector
BM40B-SRDS-G-TF)

System Connection [SD]

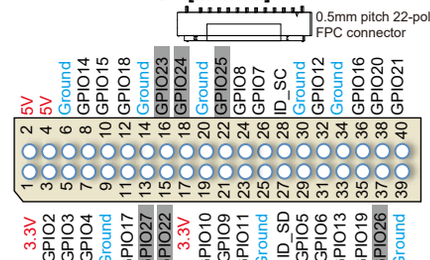

Details of each part

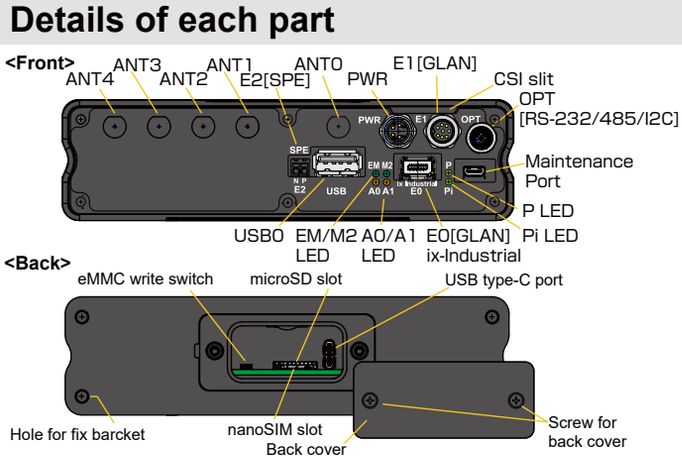

Connection example

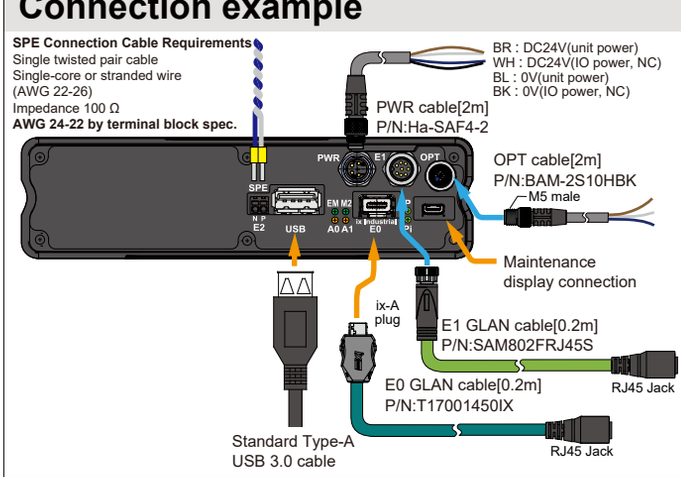

All data given are in line with the actual state of art and therefore not binding.
PiLink reserves the right to modify designs without giving the relevant reasons.

PL-R5 BASIC IP20

Internal datails

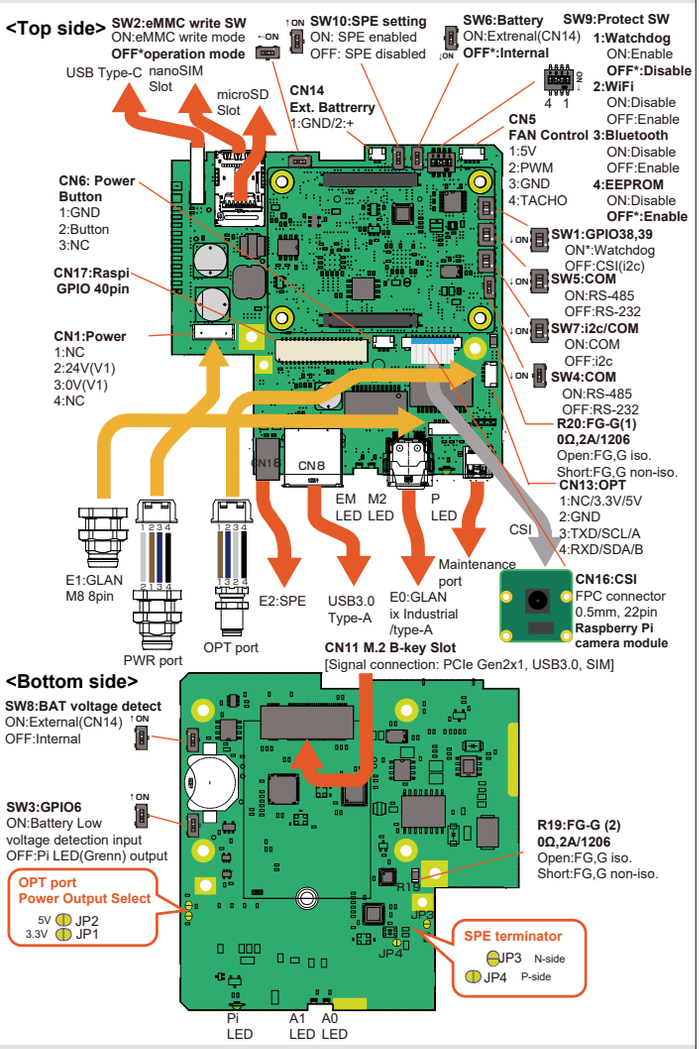

Device List

Signal	Device	Port or connection	Comments
E0:GLAN(iX)	CM5	eth0	10/100/1000Mbps
E1:GLAN(M8)	LAN7800-I	eth1	10/100/1000Mbps
E2:SPE(terminal)	LAN8651	eth2	10Mbps
E2:SPE MAC	AT24MAC402	i2c-1/ 0x30,0x50,0x58	SPE MAC address eeprom
Security IC	ATECC608B	i2c-1/0x60	
RTC	DS3231SN	i2c-1/0x68	
OPT:I2C	CM5/GPIO0,1	i2c-1/---	
OPT:RS-232	CP2102	ttyUSB0	3-wire Max.250kbps
OPT:RS-485	CP2102	ttyUSB0	2-wire Max.400kbps
CSI:I2C	CM5/GPI38,39	GPIO38,39/i2c-0	i2c1:GPIO38,39 / WD no-use
CSI	CM5/CAM1	CAM1	MIPI CSI-2 2-lanes
Pi LED(Green)	CM5	GPIO6/OUT	2-color LED: Pi LED (green) and WD Error LED (red), Defaults to OUT heartbeat
Low battery voltage	R3111N271A	GPIO6/IN	IN: Low battery voltage input
WD Enable	MAX6373KA+T	GPIO38/Out	SET0 (SET1:normal High, SET2:normal Low)
WD Reset	MAX6373KA+T	GPIO39/Out	WD

Note: This may change depending on the Raspberry Pi OS.

Watchdog (WD) timer and CSI connection

SW1: Watchdog or CSI can be switched by selecting GPIO38,39. Watchdog (WD) and CSI cannot be used at the same time. When WD is selected, GPIO38 and 39 are used for WD operation. In addition, when SW9: No.1 of protection SW is off, the reset is forcibly disabled. When CSI is selected, GPIO38 and 39 are used as i2c for CSI.
[Reference] For the factory image, please refer to the WD program /home/pi/wdrst.py.

SPE(Single Pair Ethernet)

About 10BASE-T1S (Ethernet standard defined by IEEE 802.3cg)

10BASE-T1S is an industrial and automotive Ethernet standard that transmits up to 10Mbps over a single twisted pair cable, featuring multi-drop connections of up to eight nodes and communication distances of up to 15m (unterminated) to 25m (terminated).
Item Description
Cable Type: Single Twisted Pair
Conductor: Single or twisted wire (AWG 22-26)
Characteristic Impedance: 100 Ω ±15% (typically 100 Ω)
Transmission Distance: Up to 15 meters (unterminated), 25 meters (terminated)
*Assuming multi-drop connections of multiple nodes
Shielding: Not required, but STP (Shielded Twisted Pair) is recommended in noisy environments
Communication Speed: Up to 10 Mbps (half/full duplex)

Dimensions and installation adapter

(unit: mm)

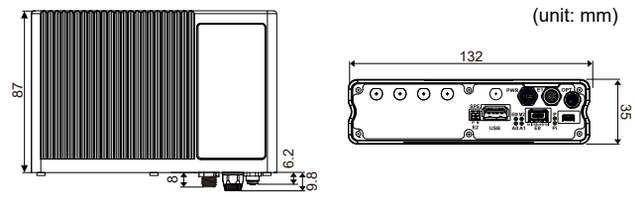

Two types of mounting parts options

<DIN rail mount adapter>

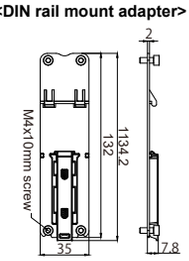

<Wall mount kit>

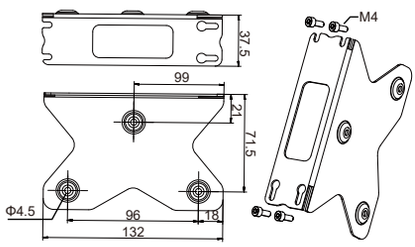

Optional accessories

Type	Name	Length	Part Number
PWR cable	M8 A-code 4pin female to open end	2m	Ha-SAF4-2
E0[GLAN] cable	ix plug to RJ45 plug	2m	IX10A12RJ45S
	ix plug to RJ45 jack	0.2m	T17001450IX
E1[GLAN] cable	M8 A-code 8pin male to RJ45 plug	2m	SAM82RJ45S
	M8 A-code 8pin male to RJ45 jack	0.2m	SAM802FRJ45S
OPT/IO cable	M5 4pin male to open end	2m	BAM-2S10HBK
Mount kit	DIN rail mount adapter	—	DINMNT01
	wall mount kit	—	WALMNT01
LTE Antenna	Monopole antenna IP20/TG.55.8113	Length 172mm	LANTIP2001
	Flat antenna IP67/GSA.8835.A.101111	Cable 1m	LANTIP6701
	Magnetic mount antenna IP65/GA.130.201111	Cable 2m	LANTIP6501
	3-in-1 antenna[GPS + 2x4G] IP67/MA256.A.LBI.001	Cable 2m	LANTIP6702

Antenna installation

Type	ANT4	ANT3	ANT2	ANT1	ANT0
Wired LAN	—	—	—	—	—
Wired LAN+LTE	Main	GNSS	Aux	—	—
Wired LAN+Wireless LAN	WL/BT	—	—	—	—
Wired LAN+Wireles LAN＋LTE	Main	GNSS	Aux	—	WL/BT

Ordering information

[Part Number] 6 R U N 1 0 0 0 R 7 4 1

- 6: 6:CM5 IP20 type
- R: R:Wired / W:Wired＋Wirelss(WiFi/Bluetooth)
- U: revision number
- 0: IP20 BASIC model

RAM[GB]	
2	2
3	4
4	8 [standard]
5	16

eMMC[GB]	
2	16
3	32
7	64 [standard]
8	64/SSD128GB
9	64/SSD256GB
A	64/SSD512GB
B	64/SSD1TB

Accessories	
0	None [standard]
1	Reserved
L	LTE
8	Hailo8
9	Hailo8L

Add-on Software	
0	None [fixed]

EXT. interface	
0	None [fixed]

Option(OPT) Interface	
1	RS-232C[standard]
2	I2C
3	RS-485

All data given are in line with the actual state of art and therefore not binding.
PiLink reserves the right to modify designs without giving the relevant reasons.

PL-R5 BASIC IP65

Picture

Features

-Industrial Raspberry Pi 5 (CM5)
-Wide power input DC9V to 40V
-Wide temperature range and high noise resistance
-Vibration-resistant, highly reliable M8 and M5 connectors
-Rugged IP65 waterproof aluminum diecast housing
-1GLAN port
-USB 3.0 Type-A and USB 3.0 for internal bus
-Onboard eMMC, no SD memory is used for boot
-microSD slot for data storage
-Internal M.2 slot for SSD and WWAN expansion
-Raspi40p connector for expansion boards
-Battery-backed RTC
-Reliable hardware watchdog
-Wall mount and DIN rail mount

Product Specifications

Processor		Broadcom BCM2712, Quad core-A76 @ 2.4GHz
Memory		RAM8GB, eMMC64GB (Depend on model)
OS		Raspberry Pi OS
Interface	Front	1x PWR ：Power input, 2-line 1x LAN ：GLAN[1000Mbps] x1ch 1x OPT ：i2c/RS-232/485 selectable 1x USB ：USB3.0 Host Type-A [Option]1x WLAN IEEE 802.11 b/g/n/ac, Bluetooth 5.0, BLE [Option]1x LTE(M.2 slot/EM7431)
	Back	1x USB-C ：USB Type-C(eMMC writing only) 1x SW ：eMMC write switch 1x microSD ：microSD slot , 1x nanoSIM slot
	Inter nal	1x M.2 slot B-key* 1x CSI, 1xGPIO 40p, 1xFAN, 1x BAT, 1x SW
LED		P: Power status, A1: LAN status Pi：User custom/WD error
RTC/NVRAM		BR1225[CR1225] Backup RTC
Watchdog		Built-in hardware watchdog
Power/ Consumption		Power rating :DC12/24V Power range : DC9V～40V/Approx.15W
Temperature		Operating：-20～60 ℃, Storage：-25～85 ℃
Humidity		Operating：0～95%(non-condensing)
IP grade		IP65
housing		Aluminum powder coating
Dimensions		W132 x D88.7x H35 mm (excluding protrusions)
Weight		Approx. 540g
Vibration/shock		IEC 60068-2-6 / IEC 60068-2-27
EMI		Radiated emissions EN55016-2-3
EMS		Electrostatic radiation immunity EN 61000-4-2
		Radio frequency electromagnetic fields EN 61000-4-3
		Fast transient burst EN 61000-4-4
Installation		DIN rail mounting, wall mounting(Option)

*This is not a full pin connection. USB3.0, PCIe, SIM are connected.

Interface

<Connector pin layout>

PWR connector

M8 A-coded
4pin Male

Pin	Col.	Signal
1	BR	24VDC(V1)
2	WH	24VDC(V2)
3	BL	0V(V1)
4	BK	0V(V2)

V1: Main unit power supply,
V2: IO power supply (not used by this unit)

OPT connector

M5 A-code
4pin Female

Pin	Col.	i2c	RS232	RS485
1	BR	3.3V/5V/none*		
2	WH	SCL	TXD	A
3	BL	0V(RS232:SG)		
4	BK	SDA	RXD	B

*1 pin for power output is no output by default.

E1 connector [GLAN]

M8 A-coded
8pin Female

Pin	Col.	Signal
1	WH/OR	TR0P
2	OR	TR0N
3	WH/GR	TR1P
4	BL	TR2P
5	WH/BL	TR2N
6	GR	TR1N
7	WH/BR	TR3P
8	BR	TR3N

LED

LED	Col.	Comments
P(GR)	Off	Power Down
	On	Power OK
P(RD)	Off	Power status OK
	Blk	Power status NG
	On	Starting, stopping
A1(OR)	Blk	E1 active
Pi(RD)	Off	WD OK
	On	WD error
Pi(GR)	Off	User OFF
	On	User ON

ANT SMA port

Type	ANT3	ANT2	ANT1	ANT0
Wired LAN	—	—	—	—
Wired LAN+LTE	Main	GNSS	Aux	—
Wired LAN+Wireless LAN	WL/BT	—	—	—
Wired LAN+Wireless LAN+LTE	Main	GNSS	Aux	WL/BT

CSI [Internal]

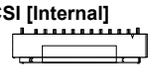

0.5mm pitch 22-pole FPC connector

Pin	Signal	Pin	Signal	Pin	Signal
1	GND	9	CAM1_C_P	17	CAM_GPIO0
2	CAM1_D0_N	10	GND	18	CAM_GPIO1
3	CAM1_D0_P	11	CAM1_D2_N	19	GND
4	GND	12	CAM1_D2_P	20	I2C0_SCL
5	CAM1_D1_N	13	GND	21	I2C0_SDA
6	CAM1_D1_P	14	CAM1_D3_N	22	+3.3V
7	GND	15	CAM1_D3_P		
8	CAM1_C_N	16	GND		

Details of each part

<Front>

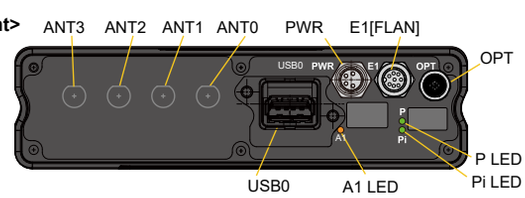

<Back>

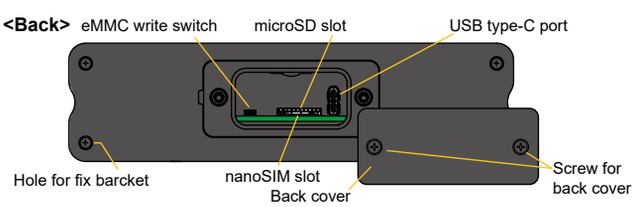

Connection example

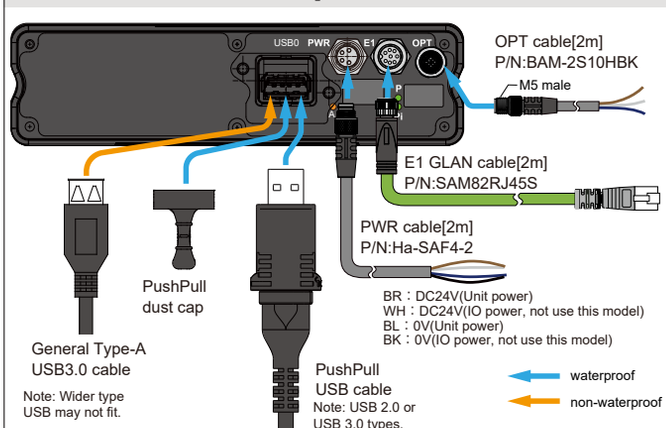

All data given are in line with the actual state of art and therefore not binding.
PiLInk reserves the right to modify designs without giving the relevant reasons.

PL-R5 BASIC IP65

Internal datails

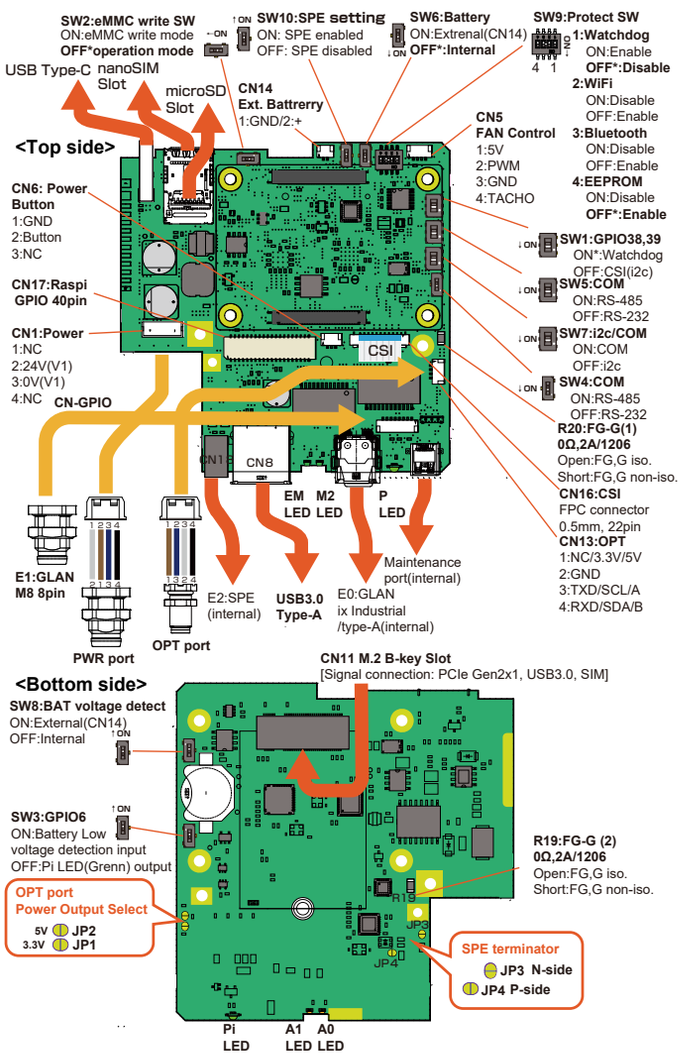

Device List

Signal	Device	Port or connection	Comments
E0:GLAN(iX)	CM5	eth0	10/100/1000Mbps(Internal, no available)
E1:GLAN(M8)	LAN7800-I	eth1	10/100/1000Mbps
E2:SPE(Terminal)	LAN8651	eth2	10Mbps(Internal, no available)
Security IC	ATECC608B	i2c-1/0x60	
RTC	DS3231SN	i2c-1/0x68	
OPT:I2C	CM5/GPIO0,1	i2c-1/---	
OPT:RS-232	CP2102	ttyUSB0	3-wire Max.250kbps
OPT:RS-485	CP2102	ttyUSB0	2-wire Max.400kbps
CSI:I2C	CM5/GPI38,39	GPIO38,39/i2c-1	i2c1:GPIO38,39 / WD nouse
CSI	CM5/CAM1	CAM1	MIPI CSI-2 2-lanes
Pi LED(Green)	CM5	GPIO6/Out	2-color LED: Pi LED (green) and WD Error LED (red), Defaults to OUT heartbeat
Low battery voltage	R3111N271A	GPIO6/IN	IN: Low battery voltage input
WD Enable	MAX6373KA+T	GPIO38/Out	SET0 (SET1:normal High, SET2:normal Low)
WD Reset	MAX6373KA+T	GPIO39/Out	WD

Note: This may change depending on the Raspberry Pi OS.

Watchdog (WD) timer and CSI connection

SW1: Watchdog or CSI can be switched by selecting GPIO38,39. Watchdog (WD) and CSI cannot be used at the same time. When WD is selected, GPIO38 and 39 are used for WD operation. In addition, when SW9: No.1 of protection SW is off, the reset is forcibly disabled. When CSI is selected, GPIO38 and 39 are used as i2c for CSI.
[Reference] For the factory image, please refer to the WD program /home/pi/wdrst.py.

Dimensions and installation adapter

(unit : mm)

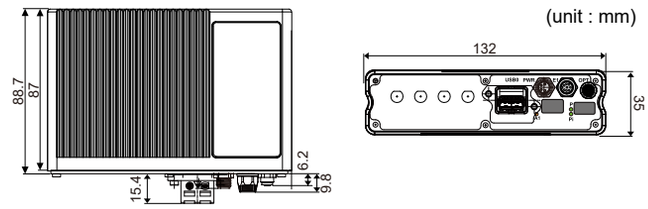

Two types of mounting parts options

<DIN rail mount adapter>

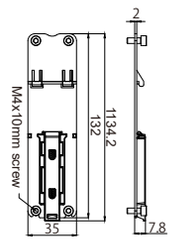

<Wall mount kit>

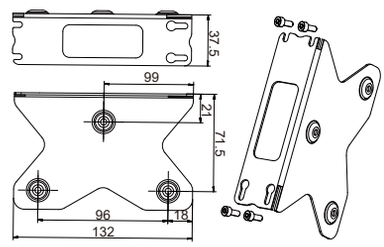

Optional accessories

Type	Name		Length	Part Number
PWR cable	M8 A-code 4-pin female to open end		2m	Ha-SAF4-2
E1[GLAN] cable	M8 A-code 8 pin male to RJ45 Plug		2m	SAM82RJ45S
OPT/IO cable	M5 4-pin male to open end		2m	BAM-2S10HBK
PushPull cable	PushPull USB ～standard USB 3.0 Type-A male		2m	09454452913
PushPull Dust cap	PushPull dust cap		Short	09 45 845 0009
			Long	09 45 845 0015
Dust cap	M8 Male(PWR) port IP67			CAPM8M6701
	M8 Female(E1) port IP67			CAPM8F6701
	M5 Female(OPT, IO) port IP67			CAPM5F6701
Mount kit	DIN rail mount adapter			DINMNT01
	wall mount kit			WALMNT01
LTE Antenna	Flat antenna IP67/GSA.8835.A.101111		Cable 1m	LANTIP6701
	Magnetic mount antenna IP65/GA.130.201111		Cable 2m	LANTIP6501
	3-in-1 antenna[GPS + 2x4G] IP67/MA256.A.LBI.001		Cable 2m	LANTIP6702
	Waterproof monopole antenna	L-type IP67/1018-532A	Length 104mm	LANTIP6703
		Straight-type IP67/1018-531A	Length 100mm	LANTIP6704
WiFi/BT Antenna	Waterproof monopole antenna	L-type IP67/T13-047-1051	Length 104mm	WANTIP67L
		Straight-type IP67/T13-047-1050	Length 100mm	WANTIP67S

Ordering information

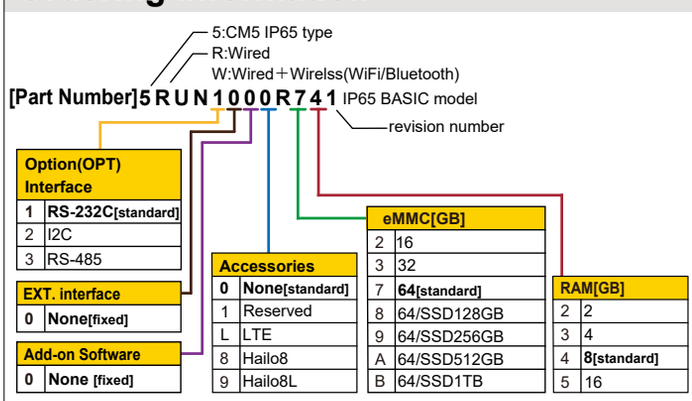

All data given are in line with the actual state of art and therefore not binding.
PiLink reserves the right to modify designs without giving the relevant reasons.

PL-R5 BASIC RJ Plus IP20

Picture

Product Specifications

Processor		Broadcom BCM2712, Quad core-A76 @ 2.4GHz
Memory		RAM8GB, eMMC64GB (Depend on model)
OS		Raspberry Pi OS
Interface	Front	1x PWR : Power input, 2-line 2x LAN : GLAN[1000Mbps] x2ch 1x SPE : 10BASE-T1S x1ch 1x OPT : i2c/RS-232/485 selectable 1x USB : USB3.0 host Type-A 1x IO : 2ch Di (photocoupler input, 5V-24V DC) 2ch Do (photorelay output, 48V DC) Max. 400mA at 25°C / Max. 250mA at 60°C 4ch Ai (no-isolated,16bit resolution,max.860SPS) Selectable 0-5V or 0-10V (100V) 1x Maintenance: Maintenance Display port(Reserved) [Option]1x WLAN IEEE 802.11 b/g/n/ac Bluetooth 5.0, BLE [Option]1x LTE(M.2 slot EM7431)
	Back	1x USB-C :USB Type-C(for eMMC writing) 1x SW :eMMC writing switch 1x microSD :microSD slot, 1x nanoSIM slot
	Inter nal	1x M.2 slot B-key* 1x CSI, 1xGPIO 40p, 1xFAN, 1x BAT, 1x SW
LED		P: Power status, A0,1:LAV status, Pi:User custom/ WD error, EM:eMMC acces, M2:M2 access
RTC/NVRAM		BR1225[CR1225] Backup RTC
Watchdog		Built-in hardware watchdog
Power		Power rating DC12/24V, Range DC9V～40V/approx.15W
Temperature		Operating : -20～60 ℃, Storage : -25～85 ℃
Humidity		Operating : 0～95%(non-condensing)
IP grade		IP20
Housing		Aluminum powder coating
Dimensions		W132 x D87 x H35 mm (excluding protrusions)
Weight		Approx. 530g
Vibration/shock		IEC 60068-2-6 / IEC 60068-2-27
EMI		Radiated emissions EN55016-2-3
EMS		Electrostatic radiation immunity EN 61000-4-2
		Radio frequency electromagnetic fields EN 61000-4-3
		Fast transient burst EN 61000-4-4
Installation		DIN rail mounting, wall mounting(Option)

* Not full pin connection. USB3.0, PCIe, SIM are connected.

Details of each part

<Front>

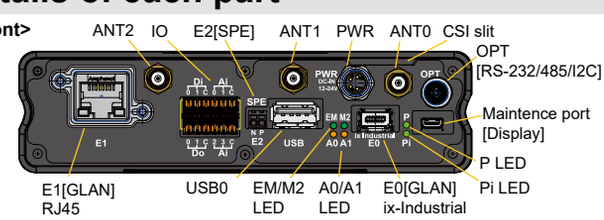

<Back> eMMC write switch microSD slot USB type-C port

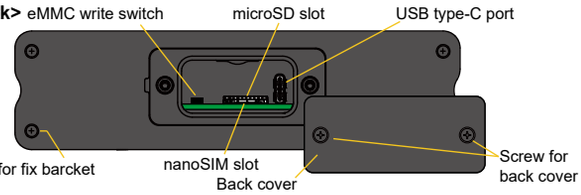

Features

-Industrial Raspberry Pi 5 (CM5)
-Wide power input DC9V to 40V
-Wide temperature range and high noise resistance
-Vibration-resistant, highly reliable M8 and M5, iX connectors
-Robust aluminum die-cast housing
-2 GLAN port and SPE (Single Pair Ethernet)
-USB 3.0 Type-A and USB 3.0 for internal bus
-Onboard eMMC, no SD memory is used for boot
-microSD slot for data storage
-Internal M.2 slot for SSD and WWAN expansion
-Raspi40p connector for expansion boards
-Battery-backed RTC
-Reliable hardware watchdog
-Wall mount and DIN rail mount compatible

Interface

<Connector pin layout>

PWR connector

M8 A-coded
4pin Male

Pin	Col.	Signal
1	BR	24VDC(V1)
2	WH	24VDC(V2)
3	BL	0V(V1)
4	BK	0V(V2)

V1: Main unit power supply,
V2: IO power supply (not used by this unit)

OPT connector

M5 A-code
4pin Female

Pin	Col.	i2c	RS232	RS485
1	BR	3.3V/5V/none*		
2	WH	SCL	TXD	A
3	BL	0V(RS232:SG		
4	BK	SDA	RXD	B

*1 pin for power output is no output by default.

E0 connector [GLAN]

ix type-A
Jack

Pin	信号	
	10/100M	1G
1	TX+	BI_DA+
2	TX-	BI_DA-
3	N.C.	GND
4	N.C.	BI_DC+
5	N.C.	BI_DC-
6	RX+	BI_DB+
7	RX-	BI_DB-
8	N.C.	GND
9	N.C.	BI_DD+
10	N.C.	BI_DD-

IO connector terminal

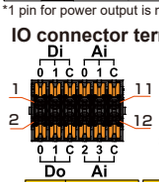

Connection cable
26...20AWG
0.14...0.5mm²
Strip length 7...8mm

Pin	Signal	Pin	Signal
1	Di0	7	Ai0
2	Do0	8	Ai2
3	Di1	9	Ai1
4	Do1	10	Ai3
5	Di-C	11	Ai-C
6	Do-C	12	Ai-C

Ai-C and Power 0V are connected internally.

E1 connector [GLAN]

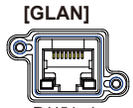

RJ45 jack

E2 connector [SPE]

Twisted pair cable
24...22AWG
0.2...0.33mm²
Impedance 100Ω

ANT SMA port [option]

Type	ANT2	ANT1	ANT0
Wired LAN	—	—	—
Wired LAN+LTE	Main	GNSS	Aux
Wired LAN+Wireless LAN	WL/BT	—	—
Wired/Wireless LAN+LTE	Main	GNSS	WL/BT

LED

LED	Sts.	Comments
P(GR)	Off	Power Down
	On	Power OK
P(RD)	Off	Power status OK
	Blk	Power status NG
	On	Starting, stopping
A0(OR)	Blk	E0 active
A1(OR)	Blk	E1 active
Pi(RD)	Off	WD OK
	On	WD error
Pi(GR)	Off	User OFF
	On	User ON
EM(GR)	Off	eMMC acces
	On	status
M2(GR)	Off	M2 acces
	On	status

CSI [Internal]

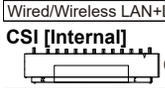

0.5mm pitch 22-pole FPC connector

Pin	Signal	Pin	Signal	Pin	Signal
1	GND	9	CAM1_C_P	17	CAM_GPIO0
2	CAM1_D0_N	10	GND	18	CAM_GPIO1
3	CAM1_D0_P	11	CAM1_D2_N	19	GND
4	GND	12	CAM1_D2_P	20	I2C0_SCL
5	CAM1_D1_N	13	GND	21	I2C0_SDA
6	CAM1_D1_P	14	CAM1_D3_N	22	+3.3V
7	GND	15	CAM1_D3_P		
8	CAM1_C_N	16	GND		

Connection example

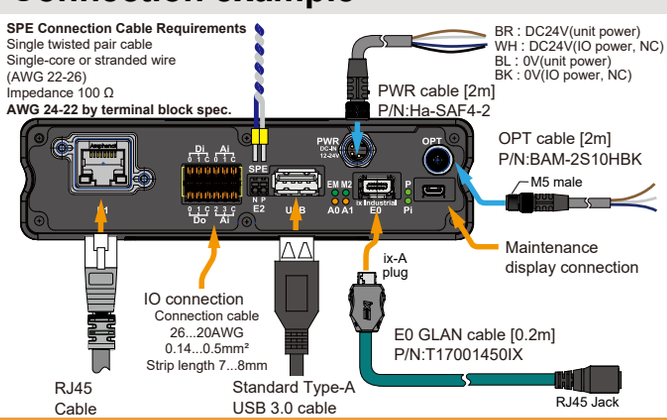

All data given are in line with the actual state of art and therefore not binding.
PiLink reserves the right to modify designs without giving the relevant reasons.

PL-R5 BASIC RJ Plus IP20

Internal datails

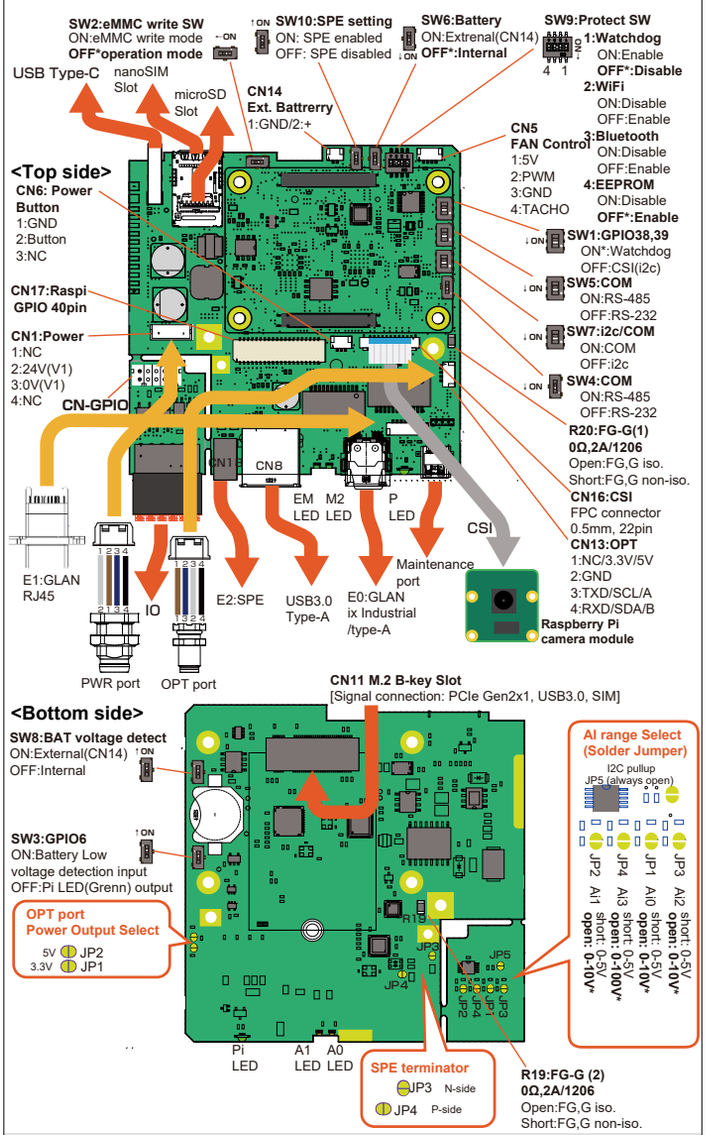

Device List

Signal	Device	Port or connection	Comments
E0:GLAN(iX)	CM5	eth0	10/100/1000Mbps
E1:GLAN(M8)	LAN7800-I	eth1	10/100/1000Mbps
E2:SPE(terminal)	LAN8651	eth2	10Mbps
E2:SPE MAC	ATECC608B	i2c-1/0x60	
Security IC	DS3231SN	i2c-1/0x68	
RTC	CM5/GPIO0,1	i2c-1/---	
OPT:I2C	CP2102	ttyUSB0	3-wire Max.250kbps
OPT:RS-232	CP2102	ttyUSB0	2-wire Max.400kbps
OPT:RS-485	CM5/GPI38,39	GPIO38,39/i2c-1	i2c1:GPIO38,39 / WD no-use
CSI:I2C	CM5/CAM1	CAM1	MIPI CSI-2 2-lanes
CSI Pi LED(Green)	CM5	GPIO6/Out	2-color LED: Pi LED (green) and WD Error LED (red), Defaults to OUT heartbeat
Low battery voltage	R3111N271A	GPIO6/IN	IN: Low battery voltage input
WD Enable	MAX6373KA+T	GPIO38/Out	SET0 (SET1:normal High, SET2:normal Low)
WD Reset	MAX6373KA+T	GPIO39/Out	WD
Di0,1	CM5	GPIO16,17/In	Photocoupler input: 5V to 24V DC, +/- common
Do0,1	CM5	GPIO18,19/Out	Photorelay output: Maximum 48V DC, 250mA, +/- common
Ai0,1,2,3	ADS1115	i2c-1/0x48	16-bit resolution, 4-channel input, 0-5V/0-32000cnt FSR = ±2.048V, single-ended

Note: This may change depending on the Raspberry Pi OS.

Watchdog (WD) timer and CSI connection

SW1: Watchdog or CSI can be switched by selecting GPIO38,39. Watchdog (WD) and CSI cannot be used at the same time. When WD is selected, GPIO38 and 39 are used for WD operation. In addition, when SW9: No.1 of protection SW is off, the reset is forcibly disabled. When CSI is selected, GPIO38 and 39 are used as i2c for CSI.
[Reference] For the factory image, please refer to the WD program /home/pi/wdrst.py.

Dimensions and installation adapter

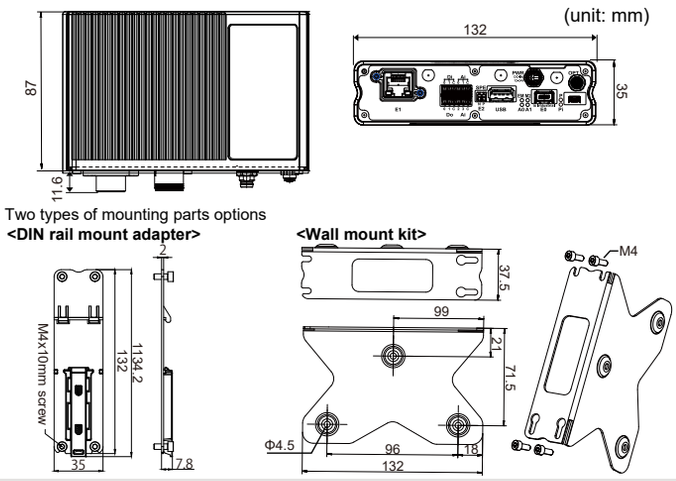

Optional accessories

Type	Name	Length	Part Number
PWR cable	M8 A-code 4pin female to open end	2m	Ha-SAF4-2
E0[GLAN] cable	ix plug to RJ45 plug ix plug to RJ45 jack	2m 0.2m	IX10A12RJ45S T17001450IX
E1[GLAN] cable	M8 A-code 8pin male to RJ45 plug	2m	SAM82RJ45S
	M8 A-code 8pin male to RJ45 jack	0.2m	SAM802FRJ45S
OPT/IO cable	M5 4pin male to open end	2m	BAM-2S10HBK
Mount kit	DIN rail mount adapter	—	DINMNT01
	wall mount kit	—	WALMNT01
LTE Antenna	Monopole antenna IP20/TG.55.8113	Length 172mm	LANTIP2001
	Flat antenna IP67/GSA.8835.A.101111	Cable 1m	LANTIP6701
	Magnetic mount antenna IP65/GA.130.201111	Cable 2m	LANTIP6501
	3-in-1 antenna[GPS + 2x4G] IP67/MA256.A.LBI.001	Cable 2m	LANTIP6702

IO connection [Reference]

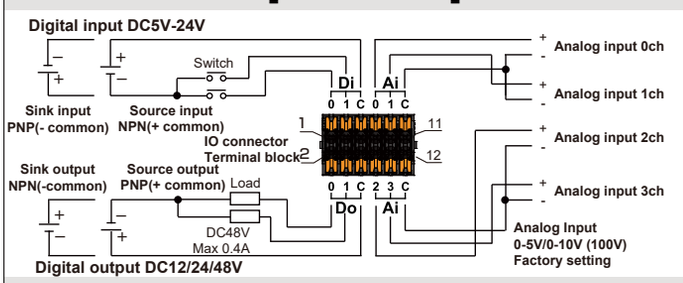

Ordering information

[Part Number] 6RJP1000R741

- 6:CM5 IP20 type
- R:Wired
- W:Wired＋Wireless(WiFi/Bluetooth)
- revision number

Option(OPT) Interface	
1	RS-232C[standard]
2	I2C
3	RS-485

EXT. interface	
0	None[Fixed]

Add-on Software	
0	None[Fixed]

Accessories	
0	None [standard]
1	Reserved
L	LTE
8	Hailo8
9	Hailo8L

RAM[GB]	
2	2
3	4
4	8 [standard]
5	16

eMMC[GB]	
2	16
3	32
7	64 [standard]
8	64/SSD128GB
9	64/SSD256GB
A	64/SSD512GB
B	64/SSD1TB

All data given are in line with the actual state of art and therefore not binding.
PiLink reserves the right to modify designs without giving the relevant reasons.

PL-R5 BASIC Plus IP65

Picture

Features

-Industrial Raspberry Pi 5 (CM5)
-Wide power input DC9V to 40V
-Wide temperature range and high noise resistance
-Vibration-resistant, highly reliable M8 and M5 connectors
-Rugged IP65 waterproof aluminum diecast housing
-1GLAN port
-USB 3.0 Type-A and USB 3.0 for internal bus
-Onboard eMMC, no SD memory is used for boot
-microSD slot for data storage
-Internal M.2 slot for SSD and WWAN expansion
-Raspi40p connector for expansion boards
-Battery-backed RTC
-Reliable hardware watchdog
-Wall mount and DIN rail mount compatible

Product Specifications

Processor		Broadcom BCM2712, Quad core-A76 @ 2.4GHz
Memory		RAM8GB, eMMC64GB (Depend on model)
OS		Raspberry Pi OS
Interface	Front	1x PWR : Power input, 2-line 1x LAN : GLAN[1000Mbps] x1ch 1x OPT : i2c/RS-232/485 selectable 1x USB : USB3.0 Host Type-A 4x IO : M5 IO port [Dix2ch,Dox2ch,Aix4ch] Ai：0-5V[default]/0-10(100)V [Option]1x WLAN IEEE 802.11 b/g/n/ac, Bluetooth 5.0, BLE [Option]1x LTE(M.2 slot/EM7431)
	Back	1x USB-C ：USB Type-C(eMMC writing only) 1x SW ：eMMC write switch 1x microSD ：microSD slot 1x nanoSIM slot
	Inter nal	1x M.2 slot B-key* 1x CSI, 1xGPIO 40p, 1xFAN, 1x BAT, 1x SW
LED		P: Power status, A1: LAN status Pi：User custom/WD error
RTC/NVRAM		BR1225[CR1225] Backup RTC
Watchdog		Built-in hardware watchdog
Power		Power rating :DC12/24V, Range : DC9V～40V / Approx.15W
Temperature		Operating：-20～60 ℃, Storage：-25～85 ℃
Humidity		Operating：0～95%(non-condensing)
IP grade		IP65
housing		Aluminum powder coating
Dimensions		W132 x D88.7x H35 mm (excluding protrusions)
Weight		Approx. 540g
Vibration/shock		IEC 60068-2-6 / IEC 60068-2-27
EMI		Radiated emissions EN55016-2-3
EMS		Electrostatic radiation immunity EN 61000-4-2
		Radio frequency electromagnetic fields EN 61000-4-3
		Fast transient burst EN 61000-4-4
Installation		DIN rail mounting, wall mounting(Option)

*This is not a full pin connection. USB3.0, PCIe, SIM are connected.

Interface

<Connector pin layout>

PWR connector

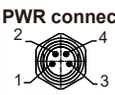

M8 A-coded
4pin Male

Pin	Col.	Signal
1	BR	24VDC(V1)
2	WH	24VDC(V2)
3	BL	0V(V1)
4	BK	0V(V2)

V1: Main unit power supply,
V2: IO power supply (not used by this unit)

OPT connector

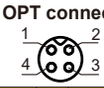

M5 A-code
4pin Female

Pin	Col.	i2c	RS232	RS485
1	BR	3.3V/5V/none*		
2	WH	SCL	TXD	A
3	BL	0V(RS232:SG		
4	BK	SDA	RXD	B

*1 pin for power output is no output by default.

E1 connector [GLAN]

M8 A-coded
8pin Male

Pin	Col.	Signal
1	WH/OR	TR0P
2	OR	TR0N
3	WH/GR	TR1P
4	BL	TR2P
5	WH/BL	TR2N
6	GR	TR1N
7	WH/BR	TR3P
8	BR	TR3N

LED

LED	Col.	Comments
P(GR)	Off	Power Down
	On	Power OK
P(RD)	Off	Power status OK
	Blk	Power status NG
	On	Starting, stopping
A1(OR)	Blk	E1 active
Pi(RD)	Off	WD OK
	On	WD error
Pi(GR)	Off	User OFF
	On	User ON

IO connectr

M5 A-code
4pin Female

Pin	Col.	IO1	IO2	IO3	IO4
1	BR	24VDC(V2)			
2	WH	Ai0	Ai1	Ai2	Ai3
3	BL	0V(V2)			
4	BK	Di0	Di1	Do0	Do1

CSI [Internal]

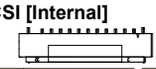

0.5mm pitch 22-pole FPC connector

Pin	Signal	Pin	Signal	Pin	Signal
1	GND	9	CAM1_C_P	17	CAM_GPIO0
2	CAM1_D0_N	10	GND	18	CAM_GPIO1
3	CAM1_D0_P	11	CAM1_D2_N	19	GND
4	GND	12	CAM1_D2_P	20	I2C0_SCL
5	CAM1_D1_N	13	GND	21	I2C0_SDA
6	CAM1_D1_P	14	CAM1_D3_N	22	+3.3V
7	GND	15	CAM1_D3_P		
8	CAM1_C_N	16	GND		

ANT SMA port[option]

Type	ANT3	ANT2	ANT1	ANT0
Wired LAN	-	-	-	-
Wired LAN+LTE	Main	GNSS	Aux	-
Wired LAN+Wireless LAN	WL/BT	-	-	-
Wired LAN+Wireless LAN＋LTE	Main	GNSS	Aux	WL/BT

Details of each part

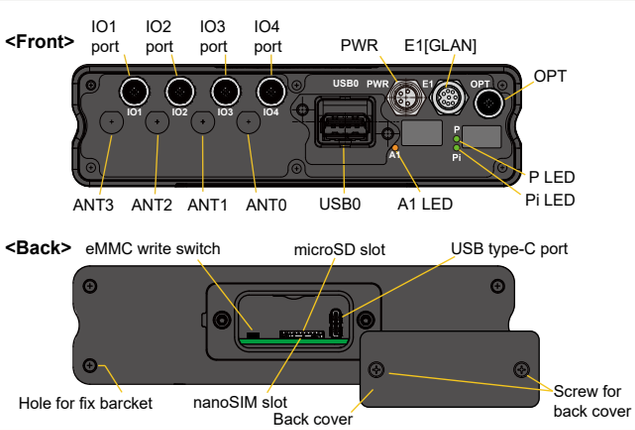

IO Connection example

This is an example of a PNP digital input/output.

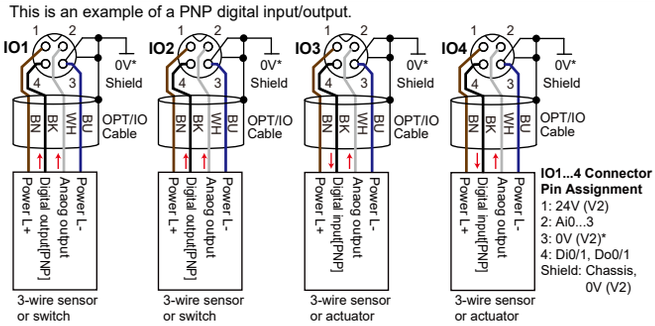

⚠ The negative analog input and the 0V V1 and V2 power supplies are connected internally. The connector shield and the 0V power supply are also connected internally. The power supply output should be a maximum of 200mA per channel, with a total power supply limit of 0.8A. The digital output is a photorelay output with a maximum of 250mA at 60°C.

All data given are in line with the actual state of art and therefore not binding.
PiLInk reserves the right to modify designs without giving the relevant reasons.

PL-R5 BASIC Plus IP65

Internal datails

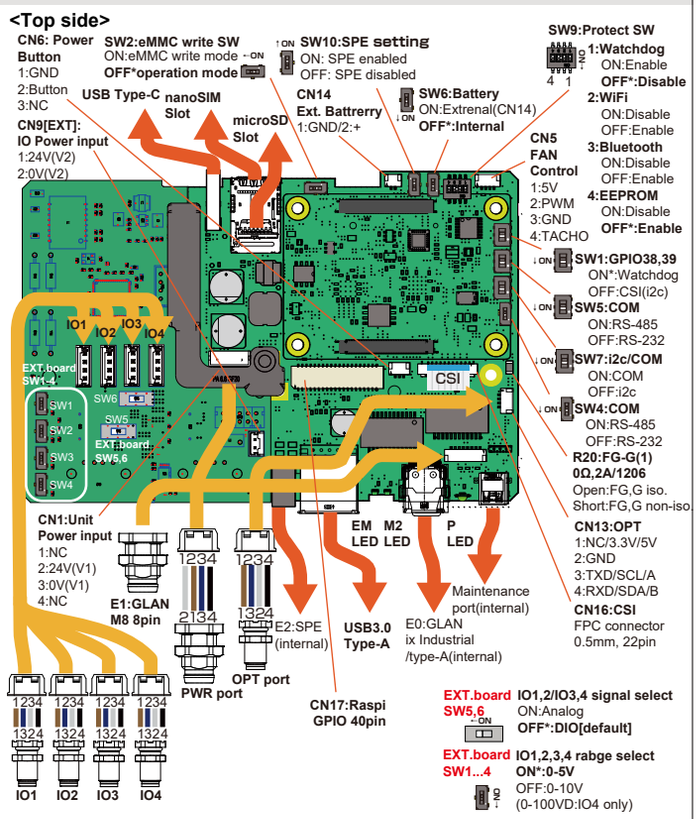

Device List

Signal	Device	Port or connection	Comments
E0:GLAN(iX)	CM5	eth0	10/100/1000Mbps(Internal, no available)
E1:GLAN(M8)	LAN7800-I	eth1	10/100/1000Mbps
E2:SPE(Terminal)	LAN8651	eth2	10Mbps(Internal, no available)
Security IC	ATECC608B	i2c-1/0x60	
RTC	DS3231SN	i2c-1/0x68	
OPT:I2C	CM5/GPIO0,1	i2c-1/---	
OPT:RS-232	CP2102	ttyUSB0	3-wire Max.250kbps
OPT:RS-485	CP2102	ttyUSB0	2-wire Max.400kbps
CSI:I2C	CM5/GPIO38,39	GPIO38,39/i2c-1	i2c1:GPIO38,39 / WD nouse
CSI	CM5/CAM1	CAM1	MIPI CSI-2 2-lanes
Pi LED(Green)	CM5	GPIO6/Out	2-color LED: Pi LED (green) and WD Error LED (red), Defaults to OUT heartbeat
Low battery	R3111N271A	GPIO6/IN	IN: Low battery voltage input
WD Enable	MAX6373KA+T	GPIO38/Out	SET0 (SET1:normal High, SET2:normal Low)
WD Reset	MAX6373KA+T	GPIO39/Out	WD
Di0,1	CM5	GPIO16,17/In	Photo input: 5V to 24V DC, +/- common
Do0,1	CM5	GPIO18,19/Out	Photorelay output: Maximum 48V DC, 250mA, +/- common
Ai0,1,2,3	ADS1 1 15	i2c-1/0x48	16-bit resolution, 4-ch input, 0-5V/0-32000cnt FSR = ±2.048V, single-ended

Note: This may change depending on the Raspberry Pi OS.

Watchdog (WD) timer and CSI connection

SW1: Watchdog or CSI can be switched by selecting GPIO38,39. Watchdog (WD) and CSI cannot be used at the same time. When WD is selected, GPIO38 and 39 are used for WD operation. In addition, when SW9: No.1 of protection SW is off, the reset is forcibly disabled. When CSI is selected, GPIO38 and 39 are used as i2c for CSI.
[Reference] For the factory image, please refer to the WD program /home/pi/wdrst.py.

Dimensions and installation adapter

(unit : mm)

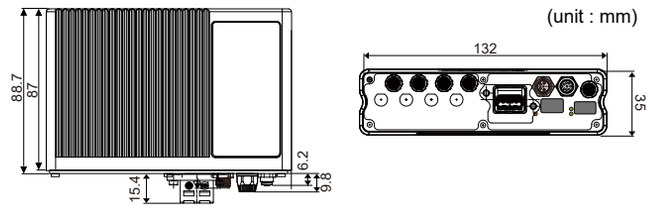

Two types of mounting parts options

<DIN rail mount adapter>

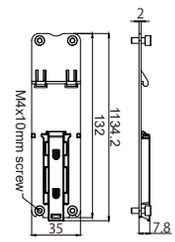

<Wall mount kit>

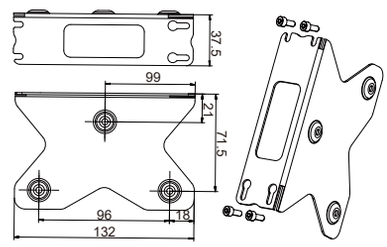

Optional accessories

Type	Name		Length	Part Number
PWR cable	M8 A-code 4-pin female to open end		2m	Ha-SAF4-2
E1[GLAN] cable	M8 A-code 8 pin male to RJ45 Plug		2m	SAM82RJ45S
OPT/IO cable	M5 4-pin male to open end		2m	BAM-2S10HBK
PushPull cable	PushPull USB ～standard USB 3.0 Type-A male		2m	09454452913
PushPull Dust cap	PushPull dust cap		Short	09 45 845 0009
			Long	09 45 845 0015
Dust cap	M8 Male(PWR) port IP67			CAPM8M6701
	M8 Female(E1) port IP67			CAPM8F6701
	M5 Female(OPT, IO) port IP67			CAPM5F6701
Mount kit	DIN rail mount adapter			DINMNT01
	wall mount kit			WALMNT01
LTE Antenna	Flat antenna IP67/GSA.8835.A.101111		Cable 1m	LANTIP6701
	Magnetic mount antenna IP65/GA.130.201111		Cable 2m	LANTIP6501
	3-in-1 antenna[GPS + 2x4G] IP67/MA256.A.LBI.001		Cable 2m	LANTIP6702
	Waterproof monopole antenna	L-type IP67/1018-532A	Length 104mm	LANTIP6703
		Straight-type IP67/1018-531A	Length 100mm	LANTIP6704
WiFi/BT Antenna	Waterproof monopole antenna	L-type IP67/T13-047-1051	Length 104mm	WANTIP67L
		Straight-type IP67/T13-047-1050	Length 100mm	WANTIP67S

Optional accessories

[Part Number] 5RBP1000R741 IP65 IO model

- 5:CM5 IP65 type
- R:Wired
- W:Wired＋Wirelss(WiFi/Bluetooth)
- revision number

Option(OPT) Interface	
1	RS-232C[standard]
2	I2C
3	RS-485

EXT. interface	
0	None[fixed]

Add-on Software	
0	None [fixed]

Accessories	
0	None[standard]
1	Reserved
L	LTE
8	Hailo8
9	Hailo8L

eMMC[GB]	
2	16
3	32
7	64[standard]
8	64/SSD128GB
9	64/SSD256GB
A	64/SSD512GB
B	64/SSD1TB

RAM[GB]	
2	2
3	4
4	8[standard]
5	16

All data given are in line with the actual state of art and therefore not binding.
PiLink reserves the right to modify designs without giving the relevant reasons.

PL-R5 BASIC M2 IP20

Picture

Features

-Industrial Raspberry Pi 5 (CM5)
-Wide power input DC9V to 40V
-Wide temperature range and high noise resistance
-Vibration-resistant, highly reliable M8 and M5, iX connectors
-Robust aluminum die-cast housing
-2 GLAN port and SPE (Single Pair Ethernet)
-USB 3.0 Type-A and USB 3.0 for internal bus
-Onboard eMMC, no SD memory is used for boot
-microSD slot for data storage
-Dual M.2 slots allow simultaneous use of SSD and LTE
-Raspi40p connector for expansion boards
-Battery-backed RTC
-Reliable hardware watchdog
-Wall mount and DIN rail mount

Product Specifications

Processor		Broadcom BCM2712, Quad core-A76 @ 2.4GHz
Memory		RAM8GB, eMMC64GB (Depend on model)
OS		Raspberry Pi OS
Interface	Front	1x PWR : Power input, 2-line 2x LAN : GLAN[1000Mbps] x2ch 1x SPE : 10BASE-T1S x1ch 1x OPT : i2c/RS-232/485 selectable 1x USB : USB3.0 host Type-A 1x Maintenance: Maintenance Display port(Reserved) [Option]1x WLAN IEEE 802.11 b/g/n/ac Bluetooth 5.0, BLE [Option]1x LTE(M.2 slot EM7431)
	Back	1x USB-C :USB Type-C(for eMMC writing) 1x SW :eMMC writing switch 1x microSD :microSD slot, 1x nanoSIM slot
	Inter nal	2x M.2 slot B-key※1,2, 2x nanoSIM slot 1x CSI, 1xGPIO 40p, 1xFAN, 1x BAT, 1x SW
LED		P: Power status, A0,1:LAN status, Pi:User custom/ WD error, EM:eMMC acces, M2:M2 access
RTC/NVRAM		BR1225[CR1225] Backup RTC
Watchdog		Built-in hardware watchdog
Power		Power rating DC12/24V, Range DC9V～40V/approx.15W
Temperature		Operating : -20～60 ℃, Storage : -25～85 ℃
Humidity		Operating : 0～95%(non-condensing)
IP grade		IP20
housing		Aluminum powder coating
Dimensions		W132 x D87 x H35 mm (excluding protrusions)
Weight		Approx. 530g
Vibration/shock		IEC 60068-2-6 / IEC 60068-2-27
EMI		Radiated emissions EN55016-2-3
EMS		Electrostatic radiation immunity EN 61000-4-2
		Radio frequency electromagnetic fields EN 61000-4-3
		Fast transient burst EN 61000-4-4
Installation		DIN rail mounting, wall mounting(Option)

*1 Not a full-pin connection. USB3.0, PCIe, and SIM are connected.
*2 Not a full-pin connection. USB3.0 and SIM are connected.

Interface

<Connector pin layout>

PWR connector

M8 A-coded
4pin Male

Pin	Col.	Signal
1	BR	24VDC(V1)
2	WH	24VDC(V2)
3	BL	0V(V1)
4	BK	0V(V2)

V1: Main unit power supply,
V2: IO power supply (not used by this unit)

OPT connector

M5 A-code
4pin Female

Pin	Col.	i2c	RS232	RS485
1	BR	3.3V/5V/none*		
2	WH	SCL	TXD	A
3	BL	0V(RS232:SG		
4	BK	SDA	RXD	B

*1 pin for power output is no output by default.

E0 connector [GLAN]

ix type-A
Jack

Pin	Signal	
	10/100M	1G
1	TX+	BI_DA+
2	TX-	BI_DA-
3	N.C.	GND
4	N.C.	BI_DC+
5	N.C.	BI_DC-
6	RX+	BI_DB+
7	RX-	BI_DB-
8	N.C.	GND
9	N.C.	BI_DD+
10	N.C.	BI_DD-

LED

LED	Sts.	Comments
P(GR)	Off	Power Down
	On	Power OK
P(RD)	Off	Power status OK
	Blk	Power status NG
	On	Starting, stopping
A0(OR)	Blk	E0 active
A1(OR)	Blk	E1 active
Pi(RD)	Off	WD OK
	On	WD error
Pi(GR)	Off	User OFF
	On	User ON
EM(GR)	Off	eMMC acces
	On	status
M2(GR)	Off	M2 acces
	On	status

E1 connector [GLAN]

M8 A-coded
8pin Female

Pin	Col.	Signal
1	WH/OR	TR0P
2	OR	TR0N
3	WH/GR	TR1P
4	BL	TR2P
5	WH/BL	TR2N
6	GR	TR1N
7	WH/BR	TR3P
8	BR	TR3N

E2 connector [SPE]

Spring-type
terminal block

Twisted pair cable
24...22AWG
0.2...0.33mm²
Impedance 100Ω

CSI[Internal]

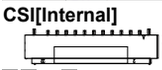

0.5mm pitch 22-pole
FPC connector

GPIO[Internal]

RasPi GPIO40pin
(Same layout as
Raspi 40-pin connector
BM40B-SRDS-G-TF)

System Connection [SD]

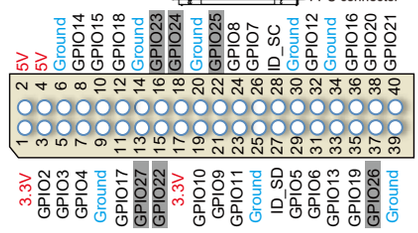

Details of each part

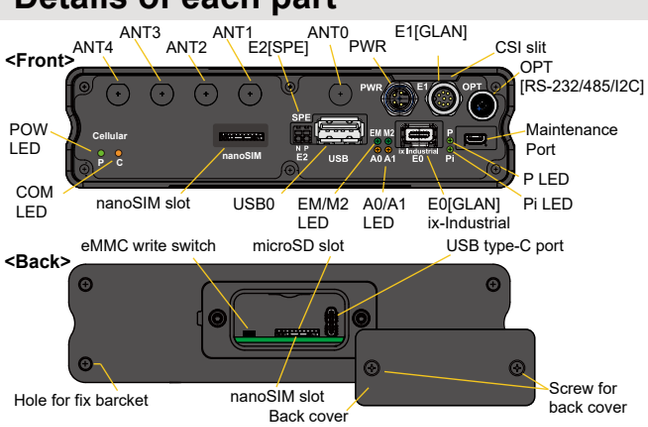

Connection example

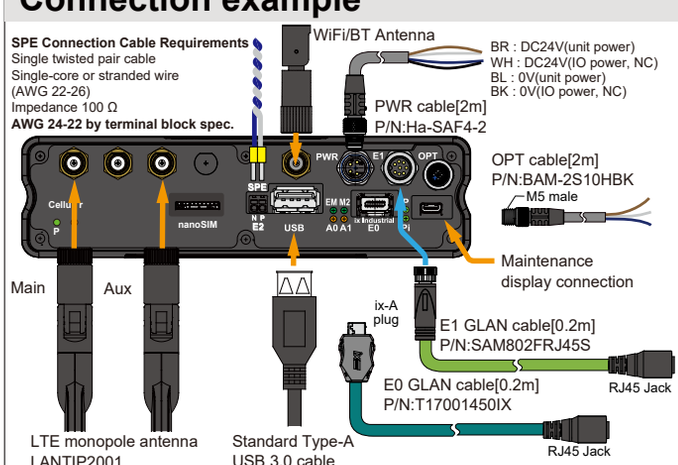

All data given are in line with the actual state of art and therefore not binding.
PiLink reserves the right to modify designs without giving the relevant reasons.

PL-R5 BASIC M2 IP20

Internal datails

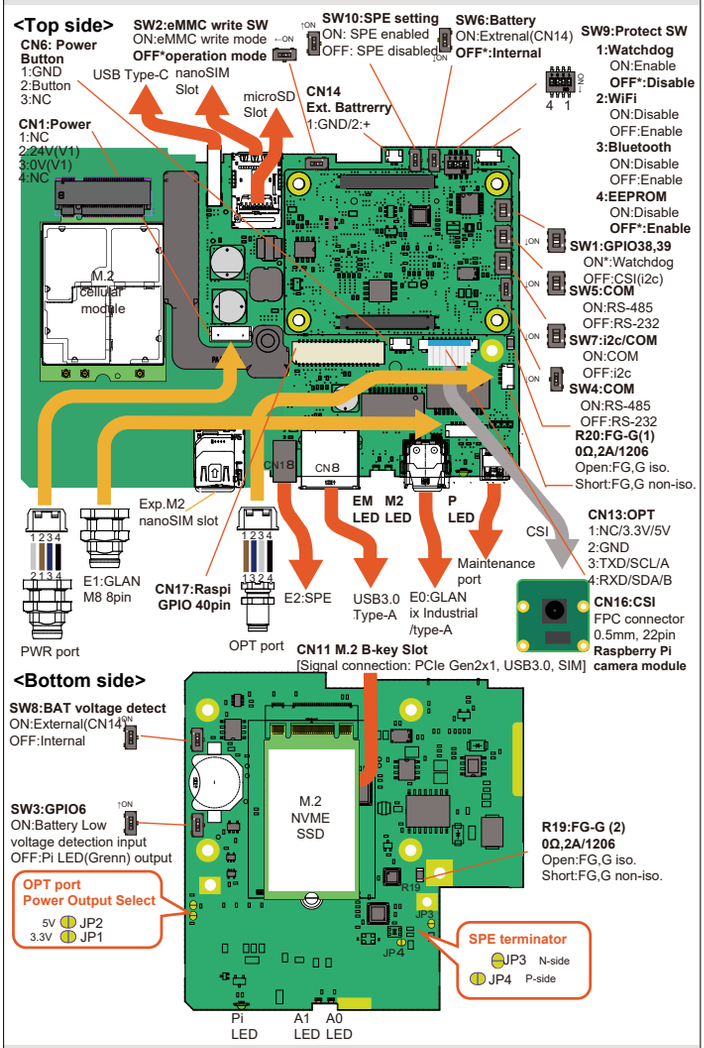

Device List

Signal	Device	Port or connection	Comments
E0:GLAN(iX)	CM5	eth0	10/100/1000Mbps
E1:GLAN(M8)	LAN7800-I	eth1	10/100/1000Mbps
E2:SPE(terminal)	LAN8651	eth2	10Mbps
E2:SPE MAC	AT24MAC402	i2c-1/ 0x30,0x50,0x58	SPE MAC address eeprom
Security IC	ATECC608B	i2c-1/0x60	
RTC	DS3231SN	i2c-1/0x68	
OPT:I2C	CM5/GPIO0,1	i2c-1/---	
OPT:RS-232	CP2102	ttyUSB0	3-wire Max.250kbps
OPT:RS-485	CP2102	ttyUSB0	2-wire Max.400kbps
CSI:I2C	CM5/GPI38,39	GPIO38,39/i2c-0	i2c1:GPIO38,39 / WD no-use
CSI	CM5/CAM1	CAM1	MIPI CSI-2 2-lanes
Pi LED(Green)	CM5	GPIO6/OUT	2-color LED: Pi LED (green) and WD Error LED (red), Defaults to OUT heartbeat
Low battery voltage	R3111N271A	GPIO6/IN	IN: Low battery voltage input
WD Enable	MAX6373KA+T	GPIO38/Out	SET0 (SET1:normal High, SET2:normal Low)
WD Reset	MAX6373KA+T	GPIO39/Out	WD

Note: This may change depending on the Raspberry Pi OS.

Watchdog (WD) timer and CSI connection

SW1: Watchdog or CSI can be switched by selecting GPIO38,39. Watchdog (WD) and CSI cannot be used at the same time. When WD is selected, GPIO38 and 39 are used for WD operation. In addition, when SW9: No.1 of protection SW is off, the reset is forcibly disabled. When CSI is selected, GPIO38 and 39 are used as i2c for CSI.
[Reference] For the factory image, please refer to the WD program /home/pi/wdrst.py.

SPE(Single Pair Ethernet)

About 10BASE-T1S (Ethernet standard defined by IEEE 802.3cg)

10BASE-T1S is an industrial and automotive Ethernet standard that transmits up to 10Mbps over a single twisted pair cable, featuring multi-drop connections of up to eight nodes and communication distances of up to 15m (unterminated) to 25m (terminated).
Item Description
Cable Type: Single Twisted Pair
Conductor: Single or twisted wire (AWG 22-26)
Characteristic Impedance: 100 Ω ±15% (typically 100 Ω)
Transmission Distance: Up to 15 meters (unterminated), 25 meters (terminated)
*Assuming multi-drop connections of multiple nodes
Shielding: Not required, but STP (Shielded Twisted Pair) is recommended in noisy environments
Communication Speed: Up to 10 Mbps (half/full duplex)

Dimensions and installation adapter

(unit: mm)

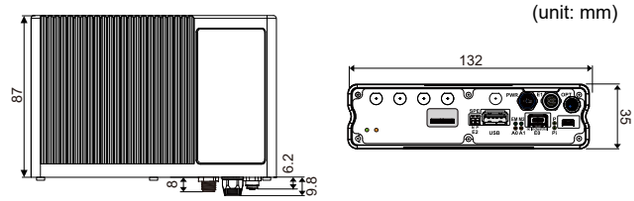

Two types of mounting parts options

<DIN rail mount adapter>

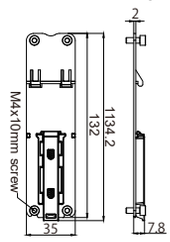

<Wall mount kit>

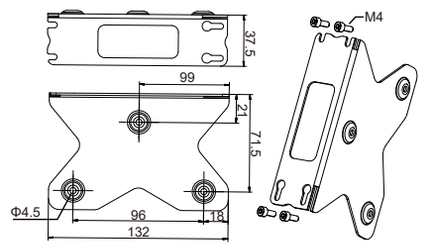

Optional accessories

Type	Name	Length	Part Number
PWR cable	M8 A-code 4pin female to open end	2m	Ha-SAF4-2
E0[GLAN] cable	ix plug to RJ45 plug	2m	IX10A12RJ45S
	ix plug to RJ45 jack	0.2m	T17001450IX
E1[GLAN] cable	M8 A-code 8pin male to RJ45 plug	2m	SAM82RJ45S
	M8 A-code 8pin male to RJ45 jack	0.2m	SAM802FRJ45S
OPT/IO cable	M5 4pin male to open end	2m	BAM-2S10HBK
Mount kit	DIN rail mount adapter	—	DINMNT01
	wall mount kit	—	WALMNT01
LTE Antenna	Monopole antenna IP20/TG.55.8113	Length 172mm	LANTIP2001
	Flat antenna IP67/GSA.8835.A.101111	Cable 1m	LANTIP6701
	Magnetic mount antenna IP65/GA.130.201111	Cable 2m	LANTIP6501
	3-in-1 antenna[GPS + 2x4G] IP67/MA256.A.LBI.001	Cable 2m	LANTIP6702

Antenna installation

Type	ANT4	ANT3	ANT2	ANT1	ANT0
Wired LAN	—	—	—	—	—
Wired LAN+LTE	Main	GNSS	Aux	—	—
Wired LAN+Wireless LAN	WL/BT	—	—	—	—
Wired LAN+Wireles LAN+LTE	Main	GNSS	Aux	—	WL/BT

Ordering information

[Part Number] 6 R B M 1 0 0 0 R 7 4 1

- 6:CM5 IP20 type
- R:Wired
- W:Wired+Wirelss(WiFi/Bluetooth)
- revision number
- IP20 dual M.2 model

RAM[GB]	
2	2
3	4
4	8 [standard]
5	16

eMMC[GB]	
2	16
3	32
7	64 [standard]
8	64/SSD128GB
9	64/SSD256GB
A	64/SSD512GB
B	64/SSD1TB

Option(OPT) Interface	
1	RS-232C[standard]
2	I2C
3	RS-485

EXT. interface	
0	None [fixed]

Add-on Software	
0	None [fixed]

Accessories	
0	None [standard]
1	Reserved
L	LTE
8	Hailo8
9	Hailo8L
A	LTE+Hailo8
B	LTE+Hailo8L

All data given are in line with the actual state of art and therefore not binding.
PiLink reserves the right to modify designs without giving the relevant reasons.

PL-R5 USB IP20 / USB3 IP20

Picture

Features

-Industrial Raspberry Pi 5 (CM5)
-Wide power input DC9V to 40V
-Wide temperature range and high noise resistance
-Vibration-resistant, highly reliable M8 and M5, iX connectors
-Robust aluminum die-cast housing
-2 GLAN port and SPE (Single Pair Ethernet)
-USB 3.0 Type-A and USB 3.0 for internal bus
-Onboard eMMC, no SD memory is used for boot
-microSD slot for data storage
-Internal M.2 slot for SSD and WWAN expansion
-Raspi40p connector for expansion boards
-Battery-backed RTC
-Reliable hardware watchdog
-Wall mount and DIN rail mount

Product Specifications

Processor		Broadcom BCM2712, Quad core-A76 @ 2.4GHz
Memory		RAM8GB, eMMC64GB (Depend on model)
OS		Raspberry Pi OS
Interface	Front	1x PWR : Power input, 2-line 2x LAN : GLAN[1000Mbps] x2ch 1x SPE : 10BASE-T1S x1ch 1x OPT : i2c/RS-232/485 selectable 3x USB : 1x USB3.0 host Type-A, 2x USB2.0 host type-A 3x USB3.0 host Type-A(USB3 model) 1x Maintenance: Maintenance Display port(Reserved) [Option]1x WLAN IEEE 802.11 b/g/n/ac Bluetooth 5.0, BLE
	Back	[Option]1x LTE(M.2 slot EM7431)
		1x USB-C :USB Type-C(for eMMC writing) 1x SW :eMMC writing switch 1x microSD :microSD slot, 1x nanoSIM slot
	Inter nal	1x M.2 slot B-key* 1x CSI, 1xGPIO 40p, 1xFAN, 1x BAT, 1x SW
LED		P: Power status, A0,1:LAV status, Pi:User custom/ WD error, EM:eMMC acces, M2:M2 access
RTC/NVRAM		BR1225[CR1225] Backup RTC
Watchdog		Built-in hardware watchdog
Power		Built-in hardware watchdog
Temperature		Power rating DC12/24V, Range DC9V～40V/approx.15W
Humidity		Operating : -20～60 ℃, Storage : -25～85 ℃
IP grade		Operating : 0～95%(non-condensing)
housing		IP20
Dimensions		Aluminum powder coating
Weight		W132 x D87 x H35 mm (excluding protrusions)
Vibration/shock		Approx. 530g
EMI		IEC 60068-2-6 / IEC 60068-2-27
EMS		Radiated emissions EN55016-2-3
		Electrostatic radiation immunity EN 61000-4-2
		Radio frequency electromagnetic fields EN 61000-4-3
Installation		Fast transient burst EN 61000-4-4
		DIN rail mounting, wall mounting(Option)

* Not full pin connection. USB3.0, PCIe, SIM are connected.

Interface

<Connector pin layout>

PWR connector

M8 A-coded
4pin Male

Pin	Col	Signal
1	BR	24VDC(V1)
2	WH	24VDC(V2)
3	BL	0V(V1)
4	BK	0V(V2)

V1: Main unit power supply,
V2: IO power supply (not used by this unit)

OPT connector

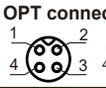

M5 A-code
4pin Female

Pin	Col.	i2c	RS232	RS485
1	BR	3.3V/5V/none*		
2	WH	SCL	TXD	A
3	BL	0V(RS232:SG		
4	BK	SDA	RXD	B

*1 pin for power output is no output by default.

E0 connector [GLAN]

ix type-A
Jack

Pin	Signal 10/100M	Signal 1G
1	TX+	BI_DA+
2	TX-	BI_DA-
3	N.C.	GND
4	N.C.	BI_DC+
5	N.C.	BI_DC-
6	RX+	BI_DB+
7	RX-	BI_DB-
8	N.C.	GND
9	N.C.	BI_DD+
10	N.C.	BI_DD-

LED

LED	Sts.	Comments
P(GR)	Off	Power Down
	On	Power OK
P(RD)	Off	Power status OK
	Blk	Power status NG
	On	Starting, stopping
A0(OR)	Blk	E0 active
A1(OR)	Blk	E1 active
Pi(RD)	Off	WD OK
	On	WD error
Pi(GR)	Off	User OFF
	On	User ON
EM(GR)	Off	eMMC acces
	On	status
M2(GR)	Off	M2 acces
	On	status

E1 connector [GLAN]

M8 A-coded
8pin Female

Pin	Col.	Signal
1	WH/OR	TR0P
2	OR	TR0N
3	WH/GR	TR1P
4	BL	TR2P
5	WH/BL	TR2N
6	GR	TR1N
7	WH/BR	TR3P
8	BR	TR3N

E2 connector [SPE]

Twisted pair cable
24...22AWG
0.2...0.33mm²
Impedance 100Ω

Spring-type
terminal block

CSI[Internal]

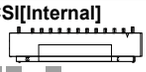

0.5mm pitch 22-pole
FPC connector

GPIO[Internal]

RasPi GPIO40pin
(Same layout as
Raspi 40-pin connector
BM40B-SRDS-G-TF)

System Connection

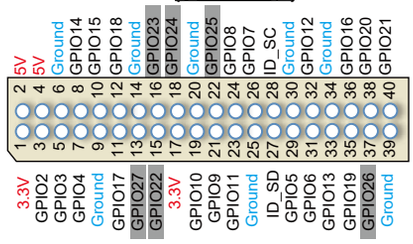

Details of each part

<Front>

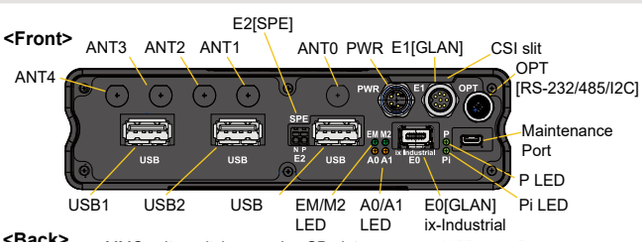

<Back>

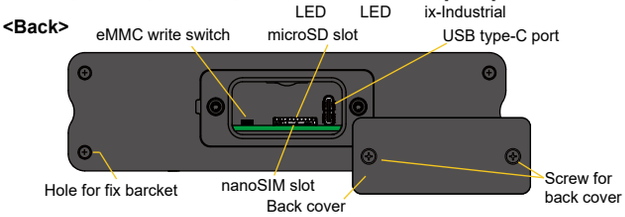

Connection example

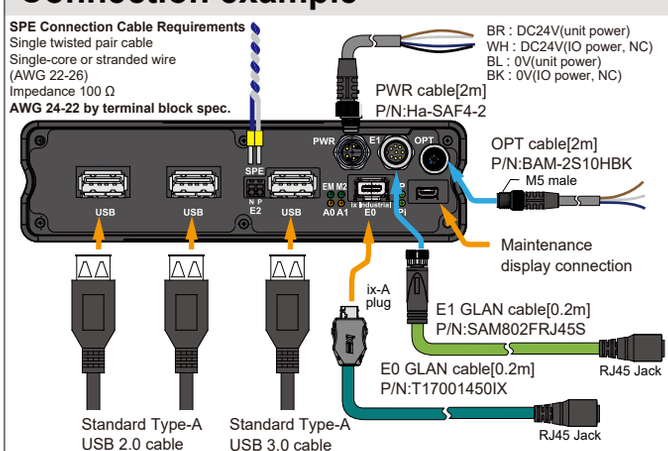

All data given are in line with the actual state of art and therefore not binding.
PiLink reserves the right to modify designs without giving the relevant reasons.

PL-R5 USB IP20

Internal datails

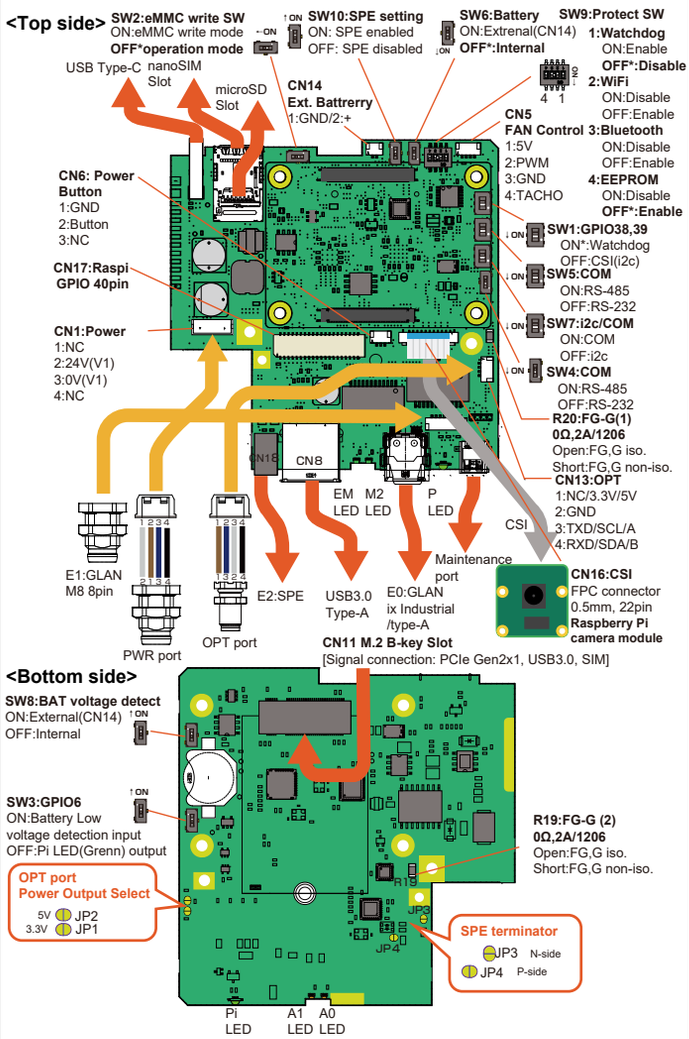

Device List

Signal	Device	Port or connection	Comments
E0:GLAN(iX)	CM5	eth0	10/100/1000Mbps
E1:GLAN(M8)	LAN7800-I	eth1	10/100/1000Mbps
E2:SPE(terminal)	LAN8651	eth2	10Mbps
E2:SPE MAC	AT24MAC402	i2c-1/ 0x30,0x50,0x58	SPE MAC address eeprom
Security IC	ATECC608B	i2c-1/0x60	
RTC	DS3231SN	i2c-1/0x68	
OPT:I2C	CM5/GPIO0,1	i2c-1/---	
OPT:RS-232	CP2102	ttyUSB0	3-wire Max.250kbps
OPT:RS-485	CP2102	ttyUSB0	2-wire Max.400kbps
CSI:I2C	CM5/GPI38,39	GPIO38,39/i2c-0	i2c1:GPIO38,39 / WD no-use
CSI	CM5/CAM1	CAM1	MIPI CSI-2 2-lanes
Pi LED(Green)	CM5	GPIO6/OUT	2-color LED: Pi LED (green) and WD Error LED (red), Defaults to OUT heartbeat
Low battery voltage	R3111N271A	GPIO6/IN	IN: Low battery voltage input
WD Enable	MAX6373KA+T	GPIO38/Out	SET0 (SET1:normal High, SET2:normal Low)
WD Reset	MAX6373KA+T	GPIO39/Out	WD

Note: This may change depending on the Raspberry Pi OS.

Watchdog (WD) timer and CSI connection

SW1: Watchdog or CSI can be switched by selecting GPIO38,39. Watchdog (WD) and CSI cannot be used at the same time. When WD is selected, GPIO38 and 39 are used for WD operation. In addition, when SW9: No.1 of protection SW is off, the reset is forcibly disabled. When CSI is selected, GPIO38 and 39 are used as i2c for CSI.
[Reference] For the factory image, please refer to the WD program /home/pi/wdrst.py.

SPE(Single Pair Ethernet)

About 10BASE-T1S (Ethernet standard defined by IEEE 802.3cg)

10BASE-T1S is an industrial and automotive Ethernet standard that transmits up to 10Mbps over a single twisted pair cable, featuring multi-drop connections of up to eight nodes and communication distances of up to 15m (unterminated) to 25m (terminated).
Item Description
Cable Type: Single Twisted Pair
Conductor: Single or twisted wire (AWG 22-26)
Characteristic Impedance: 100 Ω ±15% (typically 100 Ω)
Transmission Distance: Up to 15 meters (unterminated), 25 meters (terminated)
*Assuming multi-drop connections of multiple nodes
Shielding: Not required, but STP (Shielded Twisted Pair) is recommended in noisy environments
Communication Speed: Up to 10 Mbps (half/full duplex)

Dimensions and installation adapter

(unit: mm)

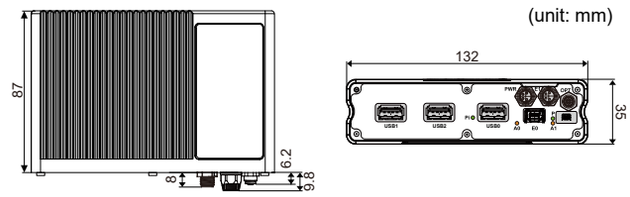

Two types of mounting parts options

<DIN rail mount adapter>

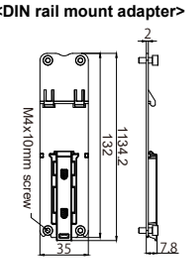

<Wall mount kit>

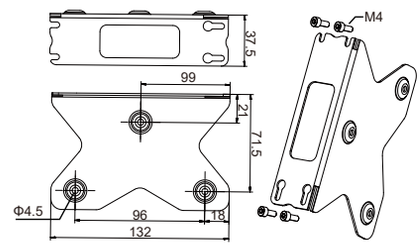

Optional accessories

Type	Name	Length	Part Number
PWR cable	M8 A-code 4pin female to open end	2m	Ha-SAF4-2
E0[GLAN] cable	ix plug to RJ45 plug	2m	IX10A12RJ45S
	ix plug to RJ45 jack	0.2m	T17001450IX
E1[GLAN] cable	M8 A-code 8pin male to RJ45 plug	2m	SAM82RJ45S
	M8 A-code 8pin male to RJ45 jack	0.2m	SAM802FRJ45S
OPT/IO cable	M5 4pin male to open end	2m	BAM-2S10HBK
Mount kit	DIN rail mount adapter	—	DINMNT01
	wall mount kit	—	WALMNT01
LTE Antenna	Monopole antenna IP20/TG.55.8113	Length 172mm	LANTIP2001
	Flat antenna IP67/GSA.8835.A.101111	Cable 1m	LANTIP6701
	Magnetic mount antenna IP65/GA.130.201111	Cable 2m	LANTIP6501
	3-in-1 antenna[GPS + 2x4G] IP67/MA256.A.LBI.001	Cable 2m	LANTIP6702

Antenna installation

Type	ANT4	ANT3	ANT2	ANT1	ANT0
Wired LAN	—	—	—	—	—
Wired LAN+LTE	Main	GNSS	Aux	—	—
Wired LAN+Wireless LAN	WL/BT	—	—	—	—
Wired LAN+Wireles LAN＋LTE	Main	GNSS	Aux	—	WL/BT

Ordering information

[Part Number] 6 R U B 1 0 0 0 R 7 4 1

- 6: 6:CM5 IP20 type
- R: R:Wired / W:Wired＋Wirelss(WiFi/Bluetooth)
- U: IP20 USB model
- 1: Option(OPT) Interface
- 0: EXT. interface
- 0: Add-on Software
- R: revision number
- 7: RAM[GB]
- 4: eMMC[GB]
- 1: Accessories

Option(OPT) Interface

1	RS-232C[standard]
2	I2C
3	RS-485

EXT. interface

0	None [fixed]

Add-on Software

0	None [fixed]

RAM[GB]

2	2
3	4
4	8 [standard]
5	16

eMMC[GB]

2	16
3	32
7	64 [standard]
8	64/SSD128GB
9	64/SSD256GB
A	64/SSD512GB
B	64/SSD1TB

Accessories

0	None [standard]
1	Reserved
L	LTE
8	Hailo8
9	Hailo8L

All data given are in line with the actual state of art and therefore not binding.
PiLink reserves the right to modify designs without giving the relevant reasons.

PL-R5 USB IP65

Picture

Features

-Industrial Raspberry Pi 5 (CM5)
-Wide power input DC9V to 40V
-Wide temperature range and high noise resistance
-Vibration-resistant, highly reliable M8 and M5 connectors
-Rugged IP65 waterproof aluminum diecast housing
-1GLAN port
-USB 3.0 Type-A and USB 3.0 for internal bus
-Onboard eMMC, no SD memory is used for boot
-microSD slot for data storage
-Internal M.2 slot for SSD and WWAN expansion
-Raspi40p connector for expansion boards
-Battery-backed RTC
-Reliable hardware watchdog
-Wall mount and DIN rail mount

Product Specifications

Processor		Broadcom BCM2712, Quad core-A76 @ 2.4GHz
Memory		RAM8GB, eMMC64GB (Depend on model)
OS		Raspberry Pi OS
Interface	Front	1x PWR : Power input, 2-line 1x LAN : GLAN[1000Mbps] x1ch 1x OPT : i2c/RS-232/485 selectable 3x USB : 1xUSB3.0 Host Type-A,2xUSB2.0 Host Type-A [Option]1x WLAN IEEE 802.11 b/g/n/ac, Bluetooth 5.0, BLE [Option]1x LTE(M.2 slot/EM7431)
	Back	1x USB-C : USB Type-C(eMMC writing only) 1x SW : eMMC write switch 1x microSD : microSD slot, 1x nanoSIM slot
	Inter nal	1x M.2 slot B-key* 1x CSI, 1xGPIO 40p, 1xFAN, 1x BAT, 1x SW
LED		P: Power status, A1: LAN status Pi : User custom/WD error
RTC/NVRAM		BR1225[CR1225] Backup RTC
Watchdog		Built-in hardware watchdog
Power/ Consumption		Power rating :DC12/24V Power range : DC9V～40V/Approx.15W
Temperature		Operating : -20～60 ℃, Storage : -25～85 ℃
Humidity		Operating : 0～95%(non-condensing)
IP grade		IP65
housing		Aluminum powder coating
Dimensions		W132 x D88.7x H35 mm (excluding protrusions)
Weight		Approx. 540g
Vibration/shock		IEC 60068-2-6 / IEC 60068-2-27
EMI		Radiated emissions EN55016-2-3
EMS		Electrostatic radiation immunity EN 61000-4-2
		Radio frequency electromagnetic fields EN 61000-4-3
		Fast transient burst EN 61000-4-4
Installation		DIN rail mounting, wall mounting(Option)

*This is not a full pin connection. USB3.0, PCIe, SIM are connected.

Interface

<Connector pin layout>

PWR connector

M8 A-coded
4pin Male

Pin	Col.	Signal
1	BR	24VDC(V1)
2	WH	24VDC(V2)
3	BL	0V(V1)
4	BK	0V(V2)

V1: Main unit power supply,
V2: IO power supply (not used by this unit)

OPT connector

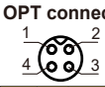

M5 A-code
4pin Female

Pin	Col.	i2c	RS232	RS485
1	BR	3.3V/5V/none*		
2	WH	SCL	TXD	A
3	BL	0V(RS232:SG)		
4	BK	SDA	RXD	B

*1 pin for power output is no output by default.

E1 connector [GLAN]

M8 A-coded
8pin Female

Pin	Col.	Signal
1	WH/OR	TR0P
2	OR	TR0N
3	WH/GR	TR1P
4	BL	TR2P
5	WH/BL	TR2N
6	GR	TR1N
7	WH/BR	TR3P
8	BR	TR3N

LED

LED	Col.	Comments
P(GR)	Off	Power Down
	On	Power OK
P(RD)	Off	Power status OK
	Blk	Power status NG
	On	Starting, stopping
A1(OR)	Blk	E1 active
Pi(RD)	Off	WD OK
	On	WD error
Pi(GR)	Off	User OFF
	On	User ON

ANT SMA port

Type	ANT3	ANT2	ANT1	ANT0
Wired LAN	—	—	—	—
Wired LAN+LTE	Main	GNSS	Aux	—
Wired LAN+Wireless LAN	WL/BT	—	—	—
Wired LAN+Wireless LAN+LTE	Main	GNSS	Aux	WL/BT

CSI [Internal]

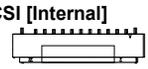

0.5mm pitch 22-pole FPC connector

Pin	Signal
1	GND
2	CAM1_D0_N
3	CAM1_D0_P
4	GND
5	CAM1_D1_N
6	CAM1_D1_P
7	GND
8	CAM1_C_N

Pin	Signal
9	CAM1_C_P
10	GND
11	CAM1_D2_N
12	CAM1_D2_P
13	GND
14	CAM1_D3_N
15	CAM1_D3_P
16	GND

Pin	Signal
17	CAM_GPIO0
18	CAM_GPIO1
19	GND
20	I2C0_SCL
21	I2C0_SDA
22	+3.3V

Details of each part

<Front>

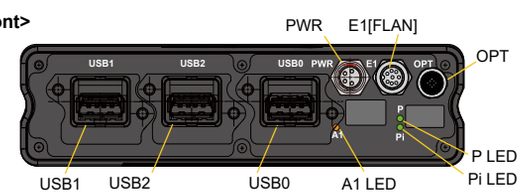

<Back>

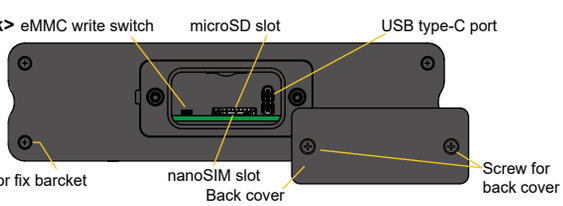

Connection example

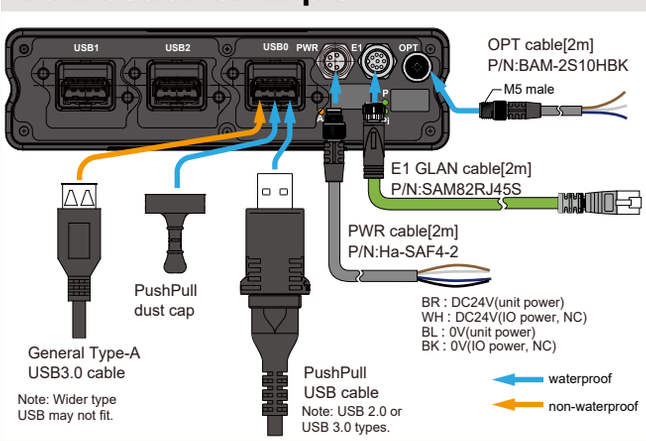

All data given are in line with the actual state of art and therefore not binding.
PiLInk reserves the right to modify designs without giving the relevant reasons.

PL-R5 USB IP65

Internal datails

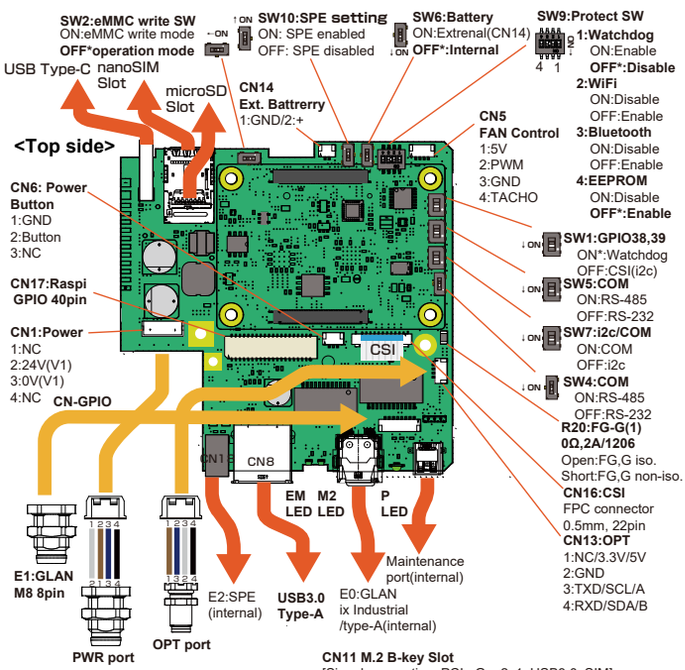

Device List

Signal	Device	Port or connection	Comments
E0:GLAN(iX)	CM5	eth0	10/100/1000Mbps(Internal, no available)
E1:GLAN(M8)	LAN7800-I	eth1	10/100/1000Mbps
E2:SPE(Terminal)	LAN8651	eth2	10Mbps(Internal, no available)
Security IC	ATECC608B	i2c-1/0x60	
RTC	DS3231SN	i2c-1/0x68	
OPT:I2C	CM5/GPIO0,1	i2c-1/---	
OPT:RS-232	CP2102	ttyUSB0	3-wire Max.250kbps
OPT:RS-485	CP2102	ttyUSB0	2-wire Max.400kbps
CSI:I2C	CM5/GPI38,39	GPIO38,39/i2c-1	i2c1:GPIO38,39 / WD nouse
CSI	CM5/CAM1	CAM1	MIPI CSI-2 2-lanes
Pi LED(Green)	CM5	GPIO6/Out	2-color LED: Pi LED (green) and WD Error LED (red), Defaults to OUT heartbeat
Low battery voltage	R3111N271A	GPIO6/IN	IN: Low battery voltage input
WD Enable	MAX6373KA+T	GPIO38/Out	SET0 (SET1:normal High, SET2:normal Low)
WD Reset	MAX6373KA+T	GPIO39/Out	WD

Note: This may change depending on the Raspberry Pi OS.

Watchdog (WD) timer and CSI connection

SW1: Watchdog or CSI can be switched by selecting GPIO38,39. Watchdog (WD) and CSI cannot be used at the same time. When WD is selected, GPIO38 and 39 are used for WD operation. In addition, when SW9: No.1 of protection SW is off, the reset is forcibly disabled. When CSI is selected, GPIO38 and 39 are used as i2c for CSI.
[Reference] For the factory image, please refer to the WD program /home/pi/wdrst.py.

Dimensions and installation adapter

(unit: mm)

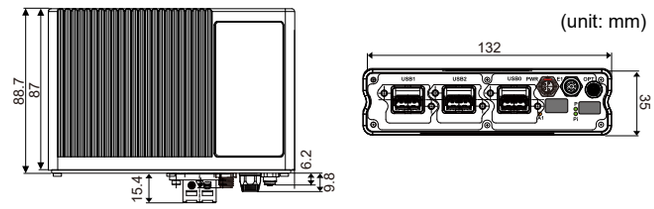

Two types of mounting parts options

<DIN rail mount adapter>

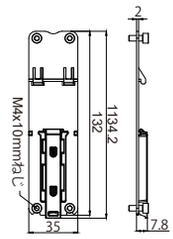

<Wall mount kit>

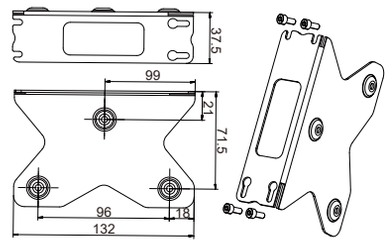

Optional accessories

Type	Name		Length	Part Number
PWR cable	M8 A-code 4-pin female to open end		2m	Ha-SAF4-2
E1[GLAN] cable	M8 A-code 8 pin male to RJ45 Plug		2m	SAM82RJ45S
OPT/IO cable	M5 4-pin male to open end		2m	BAM-2S10HBK
PushPull cable	PushPull USB ～standard USB 3.0 Type-A male		2m	09454452913
PushPull Dust cap	PushPull dust cap		Short	09 45 845 0009
			Long	09 45 845 0015
Dust cap	M8 Male(PWR) port IP67			CAPM8M6701
	M8 Female(E1) port IP67			CAPM8F6701
	M5 Female(OPT, IO) port IP67			CAPM5F6701
Mount kit	DIN rail mount adapter			DINMNT01
	wall mount kit			WALMNT01
LTE Antenna	Flat antenna IP67/GSA.8835.A.101111		Cable 1m	LANTIP6701
	Magnetic mount antenna IP65/GA.130.201111		Cable 2m	LANTIP6501
	3-in-1 antenna[GPS + 2x4G] IP67/MA256.A.LBI.001		Cable 2m	LANTIP6702
	Waterproof monopole antenna	L-type IP67/1018-532A	Length 104mm	LANTIP6703
		Straight-type IP67/1018-531A	Length 100mm	LANTIP6704
WiFi/BT Antenna	Waterproof monopole antenna	L-type IP67/T13-047-1051	Length 104mm	WANTIP67L
		Straight-type IP67/T13-047-1050	Length 100mm	WANTIP67S

Ordering information

5:CM5 IP65 type
R:Wired

[Part Number]5 R U B 1 0 0 0 R 7 4 1 IP65 USB model
revision number

Option(OPT) Interface

1	**RS-232C[standard]**
2	I2C
3	RS-485

EXT. interface

0	**None[fixed]**

Add-on Software

0	**None [fixed]**

Accessories

0	**None[standard]**
1	Reserved
L	LTE[Not selectable]
8	Hailo8
9	Hailo8L

eMMC[GB]

2	16
3	32
7	**64[standard]**
8	64/SSD128GB
9	64/SSD256GB
A	64/SSD512GB
B	64/SSD1TB

RAM[GB]

2	2
3	4
4	**8[standard]**
5	16

All data given are in line with the actual state of art and therefore not binding.
PiLink reserves the right to modify designs without giving the relevant reasons.

PL-R5 GPIO IP20

Picture

Features

-Industrial Raspberry Pi 5 (CM5)
-Wide power input DC9V to 40V
-Wide temperature range and high noise resistance
-Vibration-resistant, highly reliable M8 and M5, iX connectors
-Robust aluminum die-cast housing
-2 GLAN port and SPE (Single Pair Ethernet)
-USB 3.0 Type-A and USB 3.0 for internal bus
-Onboard eMMC, no SD memory is used for boot
-microSD slot for data storage
-Internal M.2 slot for SSD and WWAN expansion
-Raspi40p connector for expansion boards
-Battery-backed RTC
-Reliable hardware watchdog
-Wall mount and DIN rail mount

Product Specifications

Processor		Broadcom BCM2712, Quad core-A76 @ 2.4GHz
Memory		RAM8GB, eMMC64GB (Depend on model)
OS		Raspberry Pi OS
Interface	Front	1x PWR : Power input, 2-line 2x LAN : GLAN[1000Mbps] x2ch 1x SPE : 10BASE-T1S x1ch 1x OPT : i2c/RS-232/485 selectable 1x USB : 1x USB3.0 Type-A 1x GPIO : GPIO 12ch, GND, 3.3V, 5V 1x Maintenance: Maintenance Display port(Reserved) [Option]1x WLAN IEEE 802.11 b/g/n/ac Bluetooth 5.0, BLE [Option]1x LTE(M.2 slot EM7431)
	Back	1x USB-C :USB Type-C(for eMMC writing) 1x SW :eMMC writing switch 1x microSD :microSD slot, 1x nanoSIM slot
	Inter nal	1x M.2 slot B-key* 1x CSI, 1xGPIO 40p, 1xFAN, 1x BAT, 1x SW
LED		P: Power status, A0,1:LAV status, Pi:User custom/ WD error, EM:eMMC acces, M2:M2 access
RTC/NVRAM		BR1225[CR1225] Backup RTC
Watchdog		Built-in hardware watchdog
Power		Power rating DC12/24V, Range DC9V～40V/approx.15W
Temperature		Operating : -20～60 ℃, Storage : -25～85 ℃
Humidity		Operating : 0～95%(non-condensing)
IP grade		IP20
housing		Aluminum powder coating
Dimensions		W132 x D87 x H35 mm (excluding protrusions)
Weight		Approx. 530g
Vibration/shock		IEC 60068-2-6 / IEC 60068-2-27
EMI		Radiated emissions EN55016-2-3
EMS		Electrostatic radiation immunity EN 61000-4-2
		Radio frequency electromagnetic fields EN 61000-4-3
		Fast transient burst EN 61000-4-4
Installation		DIN rail mounting, wall mounting(Option)

* Not full pin connection. USB3.0, PCIe, SIM are connected.

Interface

<Connector pin layout>

PWR connector

M8 A-coded
4pin Male

Pin	Col.	Signal
1	BR	24VDC(V1)
2	WH	24VDC(V2)
3	BL	0V(V1)
4	BK	0V(V2)

V1: Main unit power supply,
V2: IO power supply (not used by this unit)

OPT connector

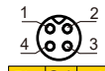

M5 A-code
4pin Female

Pin	Col.	i2c	RS232	RS485
1	BR	3.3V/5V/none*		
2	WH	SCL	TXD	A
3	BL	0V(RS232:SG		
4	BK	SDA	RXD	B

*1 pin for power output is no output by default.

E0 connector [GLAN]

ix type-A
Jack

Pin	Signal 10/100M	Signal 1G
1	TX+	BI_DA+
2	TX-	BI_DA-
3	N.C.	GND
4	N.C.	BI_DC+
5	N.C.	BI_DC-
6	RX+	BI_DB+
7	RX-	BI_DB-
8	N.C.	GND
9	N.C.	BI_DD+
10	N.C.	BI_DD-

GPIO connector

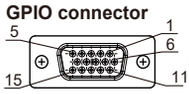

High-density
D-Sub 15-pin
female

Pin	Signal GPIO	Pin	Signal GPIO
1	GND	9	GPIO9
2	GPIO2	10	GPI10
3	GPIO3	11	GPIO11
4	GPIO4	12	GPIO12
5	GPIO5	13	GPIO13
6	GPIO6	14	3.3V output
7	GPIO7	15	5V output
8	GPIO8		

E1 connector [GLAN]

M8 A-coded
8pin Female

Pin	Col.	Signal
1	WH/OR	TR0P
2	OR	TR0N
3	WH/GR	TR1P
4	BL	TR2P
5	WH/BL	TR2N
6	GR	TR1N
7	WH/BR	TR3P
8	BR	TR3N

E2 connector [SPE]

Spring-type
terminal block

Twisted pair cable
24...22AWG
0.2...0.33mm²
Impedance 100Ω

LED

LED	Sts.	Comments
P(GR)	Off	Power Down
	On	Power OK
P(RD)	Off	Power status OK
	Blk	Power status NG
	On	Starting, stopping
A0(OR)	Blk	E0 active
A1(OR)	Blk	E1 active
Pi(RD)	Off	WD OK
	On	WD error
Pi(GR)	Off	User OFF
	On	User ON
EM(GR)	Off	eMMC acces
	On	status
M2(GR)	Off	M2 acces
	On	status

CSI[Internal]

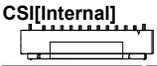

0.5mm pitch 22-pole FPC connector

Pin	Signal	Pin	Signal	Pin	Signal
1	GND	9	CAM1_C_P	17	CAM_GPIO0
2	CAM1_D0_N	10	GND	18	CAM_GPIO1
3	CAM1_D0_P	11	CAM1_D2_N	19	GND
4	GND	12	CAM1_D2_P	20	I2C0_SCL
5	CAM1_D1_N	13	GND	21	I2C0_SDA
6	CAM1_D1_P	14	CAM1_D3_N	22	+3.3V
7	GND	15	CAM1_D3_P		
8	CAM1_C_N	16	GND		

GPIO[Intrenal]

RasPi GPIO40pin
(Same layout as Raspi 40-pin
connector BM40B-SRDS-G-TF)
System Connection [SD]
System IO Connection [D-Sub]

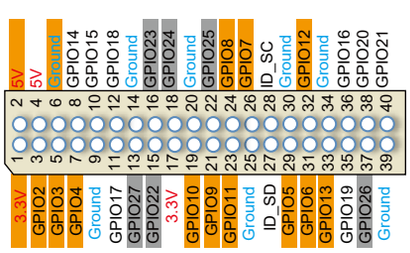

Details of each part

<Front>

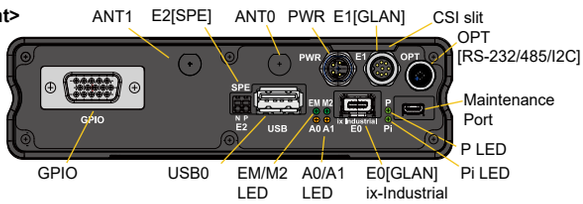

<Back>

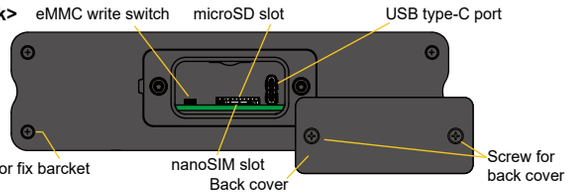

All data given are in line with the actual state of art and therefore not binding.
PiLink reserves the right to modify designs without giving the relevant reasons.

PL-R5 GPIO IP20

Internal datails

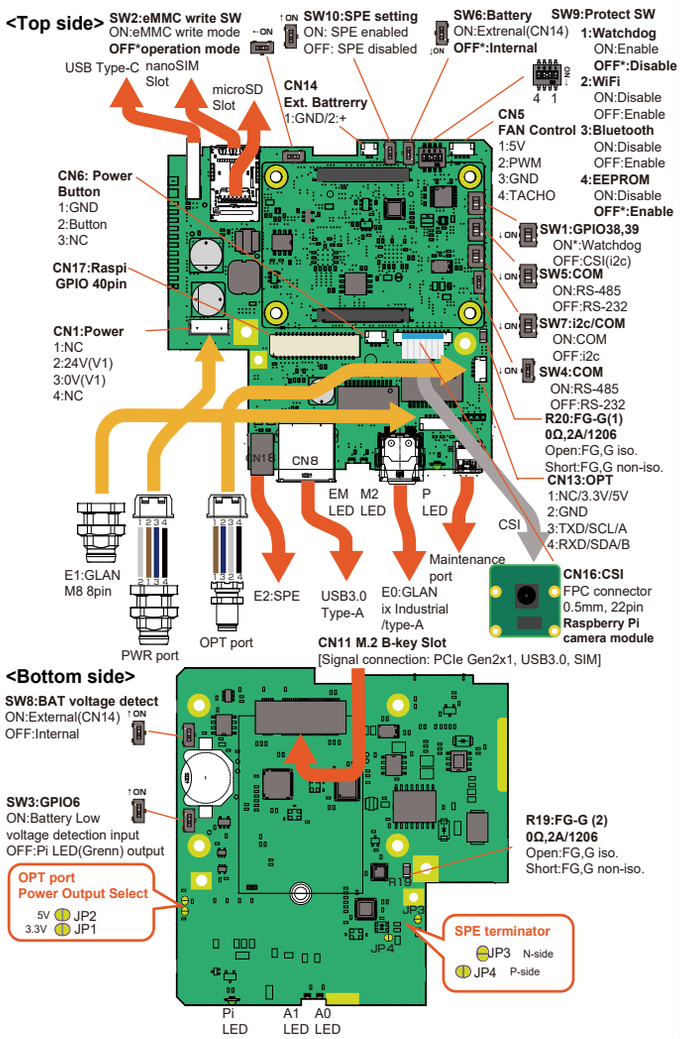

Device List

Signal	Device	Port or connection	Comments
E0:GLAN(iX)	CM5	eth0	10/100/1000Mbps
E1:GLAN(M8)	LAN7800-I	eth1	10/100/1000Mbps
E2:SPE(terminal)	LAN8651	eth2	10Mbps
E2:SPE MAC	AT24MAC402	i2c-1/ 0x30,0x50,0x58	SPE MAC address eeprom
Security IC	ATECC608B	i2c-1/0x60	
RTC	DS3231SN	i2c-1/0x68	
OPT:I2C	CM5/GPIO0,1	i2c-1/---	
OPT:RS-232	CP2102	ttyUSB0	3-wire Max.250kbps
OPT:RS-485	CP2102	ttyUSB0	2-wire Max.400kbps
CSI:I2C	CM5/GPI38,39	GPIO38,39/i2c-0	i2c1:GPIO38,39 / WD no-use
CSI	CM5/CAM1	CAM1	MIPI CSI-2 2-lanes
Pi LED(Green)	CM5	GPIO6/OUT	2-color LED: Pi LED (green) and WD Error LED (red), Defaults to OUT heartbeat
Low battery voltage	R3111N271A	GPIO6/IN	IN: Low battery voltage input
WD Enable	MAX6373KA+T	GPIO38/Out	SET0 (SET1:normal High, SET2:normal Low)
WD Reset	MAX6373KA+T	GPIO39/Out	WD

Note: This may change depending on the Raspberry Pi OS.

Watchdog (WD) timer and CSI connection

SW1: Watchdog or CSI can be switched by selecting GPIO38,39. Watchdog (WD) and CSI cannot be used at the same time. When WD is selected, GPIO38 and 39 are used for WD operation. In addition, when SW9: No.1 of protection SW is off, the reset is forcibly disabled. When CSI is selected, GPIO38 and 39 are used as i2c for CSI.
[Reference] For the factory image, please refer to the WD program /home/pi/wdrst.py.

SPE(Single Pair Ethernet)

About 10BASE-T1S (Ethernet standard defined by IEEE 802.3cg)

10BASE-T1S is an industrial and automotive Ethernet standard that transmits up to 10Mbps over a single twisted pair cable, featuring multi-drop connections of up to eight nodes and communication distances of up to 15m (unterminated) to 25m (terminated).
Item Description
Cable Type: Single Twisted Pair
Conductor: Single or twisted wire (AWG 22-26)
Characteristic Impedance: 100 Ω ±15% (typically 100 Ω)
Transmission Distance: Up to 15 meters (unterminated), 25 meters (terminated)
*Assuming multi-drop connections of multiple nodes
Shielding: Not required, but STP (Shielded Twisted Pair) is recommended in noisy environments
Communication Speed: Up to 10 Mbps (half/full duplex)

Dimensions and installation adapter

(unit: mm)

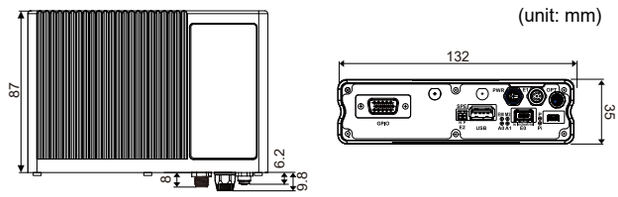

Two types of mounting parts options

<DIN rail mount adapter>

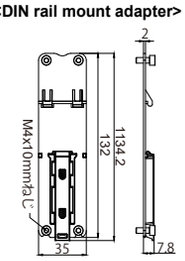

<Wall mount kit>

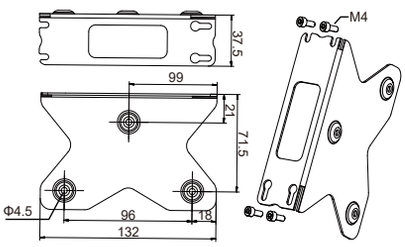

Optional accessories

Type	Name	Length	Part Number
PWR cable	M8 A-code 4pin female to open end	2m	Ha-SAF4-2
E0[GLAN] cable	ix plug to RJ45 plug	2m	IX10A12RJ45S
	ix plug to RJ45 jack	0.2m	T17001450IX
E1[GLAN] cable	M8 A-code 8pin male to RJ45 plug	2m	SAM82RJ45S
	M8 A-code 8pin male to RJ45 jack	0.2m	SAM802FRJ45S
OPT/IO cable	M5 4pin male to open end	2m	BAM-2S10HBK
Mount kit	DIN rail mount adapter	—	DINMNT01
	wall mount kit	—	WALMNT01
LTE Antenna	Monopole antenna IP20/TG.55.8113	Length 172mm	LANTIP2001
	Flat antenna IP67/GSA.8835.A.101111	Cable 1m	LANTIP6701
	Magnetic mount antenna IP65/GA.130.201111	Cable 2m	LANTIP6501
	3-in-1 antenna[GPS + 2x4G] IP67/MA256.A.LBI.001	Cable 2m	LANTIP6702

Antenna installation

Type	ANT1	ANT0
Wired LAN	—	—
Wired LAN+LTE	Main	GNSS
Wired LAN+Wireless LAN	WL/BT	—
Wired LAN+Wireles LAN＋LTE	Main	WL/BT

Ordering information

[Part Number] 6 R U G 1 0 0 0 R 7 4 1 IP20 GPIO model

- 6:CM5 IP20 type
- R:Wired
- W:Wired＋Wirelss(WiFi/Bluetooth)
- revision number

RAM[GB]	
2	2
3	4
4	8 [standard]
5	16

eMMC[GB]	
2	16
3	32
7	64 [standard]
8	64/SSD128GB
9	64/SSD256GB
A	64/SSD512GB
B	64/SSD1TB

Accessories	
0	None [standard]
1	Reserved
L	LTE
8	Hailo8
9	Hailo8L

Add-on Software	
0	None [fixed]

Option(OPT) Interface	
1	RS-232C[standard]
2	I2C
3	RS-485

EXT. interface	
0	None [fixed]

All data given are in line with the actual state of art and therefore not binding.
PiLink reserves the right to modify designs without giving the relevant reasons.

PL-R5 USB GPIO IP20

Picture

Features

-Industrial Raspberry Pi 5 (CM5)
-Wide power input DC9V to 40V
-Wide temperature range and high noise resistance
-Vibration-resistant, highly reliable M8 and M5, iX connectors
-Robust aluminum die-cast housing
-2 GLAN port and SPE (Single Pair Ethernet)
-USB 3.0 Type-A and USB 3.0 for internal bus
-Onboard eMMC, no SD memory is used for boot
-microSD slot for data storage
-Internal M.2 slot for SSD and WWAN expansion
-Raspi40p connector for expansion boards
-Battery-backed RTC
-Reliable hardware watchdog
-Wall mount and DIN rail mount

Product Specifications

Processor		Broadcom BCM2712, Quad core-A76 @ 2.4GHz
Memory		RAM8GB, eMMC64GB (Depend on model)
OS		Raspberry Pi OS
Interface	Front	1x PWR : Power input, 2-line 2x LAN : GLAN[1000Mbps] x2ch 1x SPE : 10BASE-T1S x1ch 1x OPT : i2c/RS-232/485 selectable 2x USB : 1x USB3.0 Type-A, 1x USB2.0 Type-A 1x GPIO : GPIO 12ch, GND, 3.3V, 5V 1x Maintenance: Maintenance Display port(Reserved) [Option]1x WLAN IEEE 802.11 b/g/n/ac Bluetooth 5.0, BLE [Option]1x LTE(M.2 slot EM7431)
	Back	1x USB-C :USB Type-C(for eMMC writing) 1x SW :eMMC writing switch 1x microSD :microSD slot, 1x nanoSIM slot
	Inter nal	1x M.2 slot B-key* 1x CSI, 1xGPIO 40p, 1xFAN, 1x BAT, 1x SW
LED		P: Power status, A0,1:LAV status, Pi:User custom/ WD error, EM:eMMC acces, M2:M2 access
RTC/NVRAM		BR1225[CR1225] Backup RTC
Watchdog		Built-in hardware watchdog
Power		Power rating DC12/24V, Range DC9V～40V/approx.15W
Temperature		Operating : -20～60 ℃, Storage : -25～85 ℃
Humidity		Operating : 0～95%(non-condensing)
IP grade		IP20
housing		Aluminum powder coating
Dimensions		W132 x D87 x H35 mm (excluding protrusions)
Weight		Approx. 530g
Vibration/shock		IEC 60068-2-6 / IEC 60068-2-27
EMI		Radiated emissions EN55016-2-3
EMS		Electrostatic radiation immunity EN 61000-4-2
		Radio frequency electromagnetic fields EN 61000-4-3
		Fast transient burst EN 61000-4-4
Installation		DIN rail mounting, wall mounting(Option)

* Not full pin connection. USB3.0, PCIe, SIM are connected.

Interface

<Connector pin layout>

PWR connector

M8 A-coded
4pin Male

Pin	Col.	Signal
1	BR	24VDC(V1)
2	WH	24VDC(V2)
3	BL	0V(V1)
4	BK	0V(V2)

V1: Main unit power supply,
V2: IO power supply (not used by this unit)

OPT connector

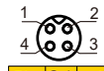

M5 A-code
4pin Female

Pin	Col.	i2c	RS232	RS485
1	BR	3.3V/5V/none*		
2	WH	SCL	TXD	A
3	BL	0V(RS232:SG		
4	BK	SDA	RXD	B

*1 pin for power output is no output by default.

E0 connector [GLAN]

ix type-A
Jack

Pin	Signal 10/100M	Signal 1G
1	TX+	BI_DA+
2	TX-	BI_DA-
3	N.C.	GND
4	N.C.	BI_DC+
5	N.C.	BI_DC-
6	RX+	BI_DB+
7	RX-	BI_DB-
8	N.C.	GND
9	N.C.	BI_DD+
10	N.C.	BI_DD-

GPIO connector

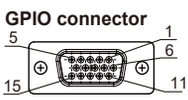

High-density
D-Sub 15-pin
female

Pin	Signal GPIO	Pin	Signal GPIO
1	GND	9	GPIO9
2	GPIO2	10	GPI10
3	GPIO3	11	GPIO11
4	GPIO4	12	GPIO12
5	GPIO5	13	GPIO13
6	GPIO6	14	3.3V output
7	GPIO7	15	5V output
8	GPIO8		

E1 connector [GLAN]

M8 A-coded
8pin Female

Pin	Col.	Signal
1	WH/OR	TR0P
2	OR	TR0N
3	WH/GR	TR1P
4	BL	TR2P
5	WH/BL	TR2N
6	GR	TR1N
7	WH/BR	TR3P
8	BR	TR3N

E2 connector [SPE]

Spring-type
terminal block

Twisted pair cable
24...22AWG
0.2...0.33mm²
Impedance 100Ω

LED

LED	Sts.	Comments
P(GR)	Off	Power Down
	On	Power OK
P(RD)	Off	Power status OK
	Blk	Power status NG
	On	Starting, stopping
A0(OR)	Blk	E0 active
A1(OR)	Blk	E1 active
Pi(RD)	Off	WD OK
	On	WD error
Pi(GR)	Off	User OFF
	On	User ON
EM(GR)	Off	eMMC acces
	On	status
M2(GR)	Off	M2 acces
	On	status

CSI[Internal]

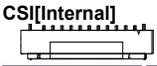

0.5mm pitch 22-pole FPC connector

Pin	Signal	Pin	Signal	Pin	Signal
1	GND	9	CAM1_C_P	17	CAM_GPIO0
2	CAM1_D0_N	10	GND	18	CAM_GPIO1
3	CAM1_D0_P	11	CAM1_D2_N	19	GND
4	GND	12	CAM1_D2_P	20	I2C0_SCL
5	CAM1_D1_N	13	GND	21	I2C0_SDA
6	CAM1_D1_P	14	CAM1_D3_N	22	+3.3V
7	GND	15	CAM1_D3_P		
8	CAM1_C_N	16	GND		

GPIO[Intrenal]

RasPi GPIO40pin
(Same layout as Raspi 40-pin
connector BM40B-SRDS-G-TF)
System Connection [SD]
System IO Connection [D-Sub]

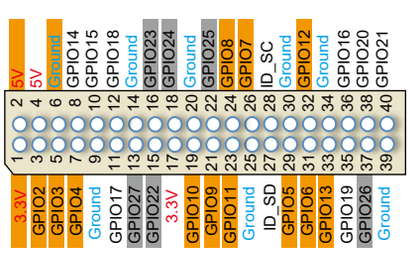

Details of each part

<Front>

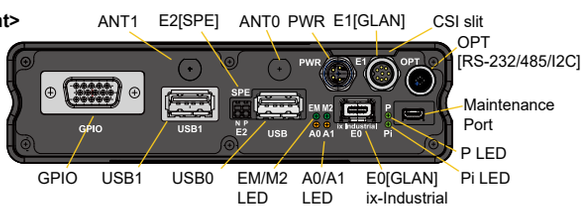

<Back>

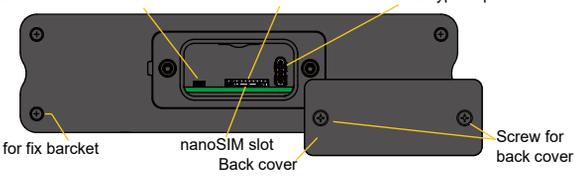

All data given are in line with the actual state of art and therefore not binding.
PiLink reserves the right to modify designs without giving the relevant reasons.

PL-R5 USB GPIO IP20

Internal datails

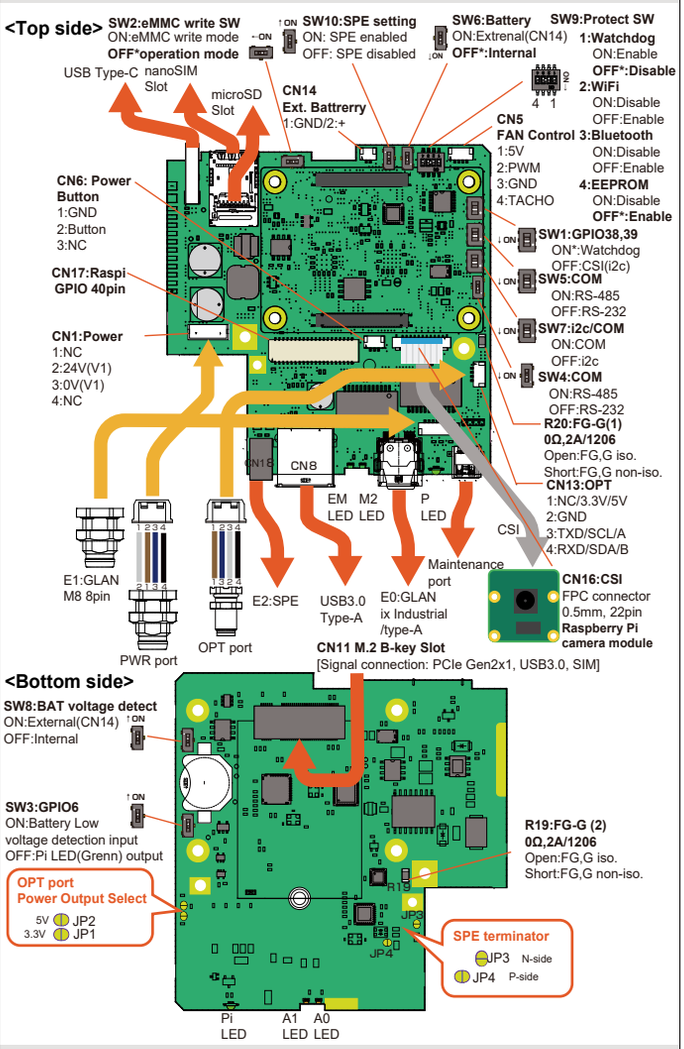

Device List

Signal	Device	Port or connection	Comments
E0:GLAN(iX)	CM5	eth0	10/100/1000Mbps
E1:GLAN(M8)	LAN7800-I	eth1	10/100/1000Mbps
E2:SPE(terminal)	LAN8651	eth2	10Mbps
E2:SPE MAC	AT24MAC402	i2c-1/ 0x30,0x50,0x58	SPE MAC address eeprom
Security IC	ATECC608B	i2c-1/0x60	
RTC	DS3231SN	i2c-1/0x68	
OPT:I2C	CM5/GPIO0,1	i2c-1/---	
OPT:RS-232	CP2102	ttyUSB0	3-wire Max.250kbps
OPT:RS-485	CP2102	ttyUSB0	2-wire Max.400kbps
CSI:I2C	CM5/GPI38,39	GPIO38,39/i2c-0	i2c1:GPIO38,39 / WD no-use
CSI	CM5/CAM1	CAM1	MIPI CSI-2 2-lanes
Pi LED(Green)	CM5	GPIO6/OUT	2-color LED: Pi LED (green) and WD Error LED (red), Defaults to OUT heartbeat
Low battery voltage	R3111N271A	GPIO6/IN	IN: Low battery voltage input
WD Enable	MAX6373KA+T	GPIO38/Out	SET0 (SET1:normal High, SET2:normal Low)
WD Reset	MAX6373KA+T	GPIO39/Out	WD

Note: This may change depending on the Raspberry Pi OS.

Watchdog (WD) timer and CSI connection

SW1: Watchdog or CSI can be switched by selecting GPIO38,39. Watchdog (WD) and CSI cannot be used at the same time. When WD is selected, GPIO38 and 39 are used for WD operation. In addition, when SW9: No.1 of protection SW is off, the reset is forcibly disabled. When CSI is selected, GPIO38 and 39 are used as i2c for CSI.
[Reference] For the factory image, please refer to the WD program /home/pi/wdrst.py.

SPE(Single Pair Ethernet)

About 10BASE-T1S (Ethernet standard defined by IEEE 802.3cg)

10BASE-T1S is an industrial and automotive Ethernet standard that transmits up to 10Mbps over a single twisted pair cable, featuring multi-drop connections of up to eight nodes and communication distances of up to 15m (unterminated) to 25m (terminated).
Item Description
Cable Type: Single Twisted Pair
Conductor: Single or twisted wire (AWG 22-26)
Characteristic Impedance: 100 Ω ±15% (typically 100 Ω)
Transmission Distance: Up to 15 meters (unterminated), 25 meters (terminated)
*Assuming multi-drop connections of multiple nodes
Shielding: Not required, but STP (Shielded Twisted Pair) is recommended in noisy environments
Communication Speed: Up to 10 Mbps (half/full duplex)

Dimensions and installation adapter

(unit: mm)

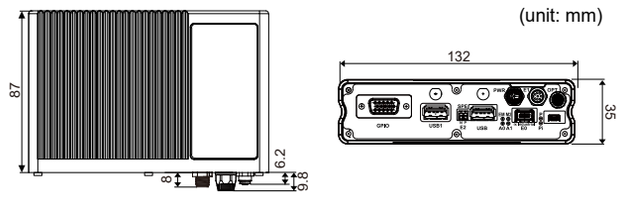

Two types of mounting parts options

<DIN rail mount adapter>

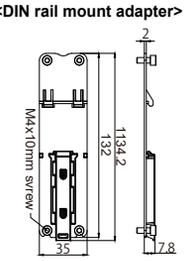

<Wall mount kit>

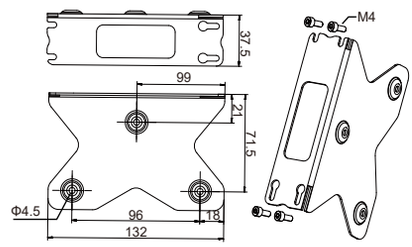

Optional accessories

Type	Name	Length	Part Number
PWR cable	M8 A-code 4pin female to open end	2m	Ha-SAF4-2
E0[GLAN] cable	ix plug to RJ45 plug	2m	IX10A12RJ45S
	ix plug to RJ45 jack	0.2m	T17001450IX
E1[GLAN] cable	M8 A-code 8pin male to RJ45 plug	2m	SAM82RJ45S
	M8 A-code 8pin male to RJ45 jack	0.2m	SAM802FRJ45S
OPT/IO cable	M5 4pin male to open end	2m	BAM-2S10HBK
Mount kit	DIN rail mount adapter	—	DINMNT01
	wall mount kit	—	WALMNT01
LTE Antenna	Monopole antenna IP20/TG.55.8113	Length 172mm	LANTIP2001
	Flat antenna IP67/GSA.8835.A.101111	Cable 1m	LANTIP6701
	Magnetic mount antenna IP65/GA.130.201111	Cable 2m	LANTIP6501
	3-in-1 antenna[GPS + 2x4G] IP67/MA256.A.LBI.001	Cable 2m	LANTIP6702

Antenna installation

Type	ANT1	ANT0
Wired LAN	—	—
Wired LAN+LTE	Main	GNSS
Wired LAN+Wireless LAN	WL/BT	—
Wired LAN+Wireles LAN＋LTE	Main	WL/BT

Ordering information

[Part Number]6 R U I 1 0 0 0 R 7 4 1

- 6:CM5 IP20 type
- R:Wired
- W:Wired＋WireIss(WiFi/Bluetooth)
- revision number
- IP20 USB GPIO

RAM[GB]	
2	2
3	4
4	8 [standard]
5	16

eMMC[GB]	
2	16
3	32
7	64 [standard]
8	64/SSD128GB
9	64/SSD256GB
A	64/SSD512GB
B	64/SSD1TB

Accessories	
0	None [standard]
1	Reserved
L	LTE
8	Hailo8
9	Hailo8L

Add-on Software	
0	None [fixed]

Option(OPT) Interface	
1	RS-232C[standard]
2	I2C
3	RS-485

EXT. interface	
0	None [fixed]

All data given are in line with the actual state of art and therefore not binding.
PiLink reserves the right to modify designs without giving the relevant reasons.

PL-R5 DIO IP20

Picture

Product Specifications

Processor		Broadcom BCM2712, Quad core-A76 @ 2.4GHz
Memory		RAM8GB, eMMC64GB (Depend on model)
OS		Raspberry Pi OS
Interface	Front	1x PWR : Power input, 2-line 2x LAN : GLAN[1000Mbps] x2ch 1x SPE : 10BASE-T1S x1ch 1x OPT : i2c/RS-232/485 selectable 1x USB : USB3.0 host Type-A 1x CN1 : Di 16ch [14ch](PNP)/2.4mA at 24VDC Do 8ch(PNP)/Pushpull0.1A,High-side0.5A COM 1ch RS-232/RS485 (half duplex) switching CAN 1 or 2ch/CAN 2.0B, CAN FD 1Mbps 1x PRG : STM32 programing port 1x Maintenance: Maintenance Display port(Reserved) [Option]1x WLAN IEEE 802.11 b/g/n/ac, Bluetooth 5.0, BLE [Option]1x LTE(M.2 slot EM7431)
	Back	1x USB-C :USB Type-C(for eMMC writing) 1x SW :eMMC writing switch 1x microSD :microSD slot, 1x nanoSIM slot
	Inter nal	1x M.2 slot B-key* 1x CSI, 1xGPIO 40p, 1xFAN, 1x BAT, 1x SW
LED		P: Power status, A0,1: LAN status, Pi:User custom/WD error, EM:eMMC access, M2:M2access Di, Do: DIO status
RTC/NVRAM		BR1225[CR1225] Backup RTC MCP79410-I:CR1632 Backup RTC, NVRAM
Watchdog		Built-in hardware watchdog
Power		Power rating DC12/24V, Range DC9V～40V/approx.15W
Temperature		Operating : -20～60 ℃, Storage : -25～85 ℃
Humidity		Operating : 0～95%(non-condensing)
IP grade		IP20
housing		Aluminum powder coating
Dimensions		W132 x D87 x H35 mm (excluding protrusions)
Weight		Approx. 530g
Vibration/shock		IEC 60068-2-6 / IEC 60068-2-27
EMI		Radiated emissions EN55016-2-3
EMS		Electrostatic radiation immunity EN 61000-4-2
		Radio frequency electromagnetic fields EN 61000-4-3
		Fast transient burst EN 61000-4-4
Installation		DIN rail mounting, wall mounting(Option)

* Not full pin connection. USB3.0, PCIe, SIM are connected.

Details of each part

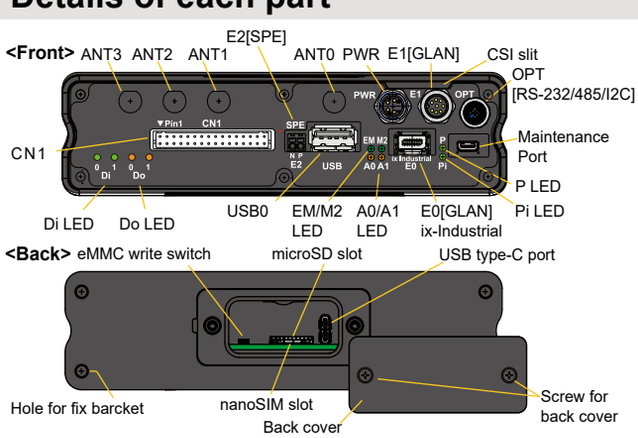

Features

-Industrial Raspberry Pi 5 (CM5)
-Wide power input DC9V to 40V
-Wide temperature range and high noise resistance
-Vibration-resistant, highly reliable M8 and M5, iX connectors
-Robust aluminum die-cast housing
-GLAN 2ch, SPE/CAN, DIO, and serialcommunication
-USB 3.0 Type-A and USB 3.0 for internal bus
-Onboard eMMC, no SD memory is used for boot
-microSD slot for data storage
-Internal M.2 slot for SSD and WWAN expansion
-Raspi40p connector for expansion boards
-Battery-backed RTC
-Reliable hardware watchdog
-Wall mount and DIN rail mount

Interface

<Connector pin layout>

PWR connector

M8 A-coded 4pin Male

Pin	Col.	Signal
1	BR	24VDC(V1)
2	WH	24VDC(V2)
3	BL	0V(V1)
4	BK	0V(V2)

V1: Main unit power supply.
V2: IO power supply (not used by this unit)

OPT connector

M5 A-code 4pin Female

Pin	Col.	i2c	RS232	RS485
1	BR	3.3V/5V/none*		
2	WH	SCL	TXD	A
3	BL	0V(RS232:SG		
4	BK	SDA	RXD	B

*1 pin for power output is no output by default.

E0 connector [GLAN]

ix type-A Jack

Pin	Signal 10/100M	Signal 1G
1	TX+	BI_DA+
2	TX-	BI_DA-
3	N.C.	GND
4	N.C.	BI_DC+
5	N.C.	BI_DC-
6	RX+	BI_DB+
7	RX-	BI_DB-
8	N.C.	GND
9	N.C.	BI_DD+
10	N.C.	BI_DD-

E1 connector [GLAN]

M8 A-coded 8pin Female

Pin	Col.	Signal
1	WH/OR	TR0P
2	OR	TR0N
3	WH/GR	TR1P
4	BL	TR2P
5	WH/BL	TR2N
6	GR	TR1N
7	WH/BR	TR3P
8	BR	TR3N

E2 connector [SPE]

N P

Twisted pair cable
24...22AWG
0.2...0.33mm²
Impedance 100Ω

CN1 port
[PHD 32pin connector/JST]

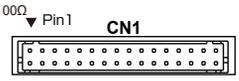

Harness side
-32-pin housing: PHDR-32VS
-Contact: BPHD/SPHD-001T-P0.5
AWG 26...22 / Insulation OD 1.0...1.5mm
-Contact: BPHD/SPHD-002T-P0.5
AWG 28...24 / Insulation OD 0.9...1.5mm

Pin	1	3	5	7	9	11	13	15*	17	19	21	23	25	27	29	31
Signal	Di 0	Di 2	Di 4	Di 6	Di 8	Di 10	Di 12	Di14 or CAN 1+	Di Do GND	Do 0	Do 2	Do 4	Do 6	RS232(Tx) /RS485(+)	RS232/ 485 SG	CAN 0+
	Digital Input(PNP)									Digital Output((PNP)						
Pin	2	4	6	8	10	12	14	16*	18	20	22	24	26	28	30	32
Signal	Di 1	Di 3	Di 5	Di 7	Di 9	Di 11	Di 13	Di15 or CAN 1-	Di Do GND	Do 1	Do 3	Do 5	Do 7	RS232(Rx) /RS485(-)	Di COM DC24V	CAN 0-
	Digital Input((PNP)									Digital Output((PNP)						

*: The signal changes depending on the CAN1/2 port model selected.

⚠ **Note) The default rating for each digital output is 0.1A. Please ensure that the total current does not exceed 1A. For protection purposes, an automatic reset fuse is built into the device.**

GPIO[Internal]

RasPi GPIO40pin
(Same layout as Raspi 40-pin connector BM40B-SRDS-G-TF)

System Connection [SD]
System IO Connection [IO]

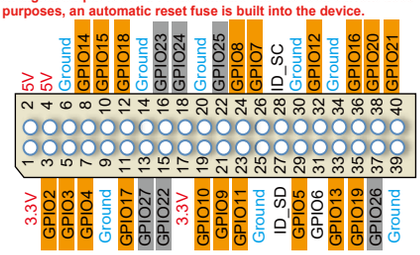

LED

LED	Sts.	Comments
P(GR)	Off	Power Down
	On	Power OK
P(RD)	Off	Power status OK
	Blk	Power status NG
	On	Starting, stopping
A0(OR)	Blk	E0 active
A1(OR)	Blk	E1 active
Pi(RD)	Off	WD OK
	On	WD error
Pi(GR)	Off	User OFF
	On	User ON
EM(GR)	Off	eMMC acces
	On	status
M2(GR)	Off	M2 acces
	On	status
Di0,1	Off	Di OFF
	On	Di ON
Do0,1	Off	Do OFF
	On	Do ON

Antenna installation

Type	ANT3	ANT2	ANT1	ANT0
Wired LAN	—	—	—	—
Wired LAN+LTE	Main	GNSS	Aux	—
Wired/Wireless LAN	WL/BT	—	—	—
Wired/Wireles LAN+LTE	Main	GNSS	Aux	WL/BT

CSI[Internal]

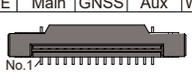

No.1

CN1connection device list [reference]

Type	Manufacturer Tools	Third-party tools
Tools	YRS-620 [JST]	SN-01BM [IWISS]
Termnal	SPHD-002T-P0.5[JST]	BPHD-002T-P0.5[JST]
Connector	CN1 PHDR-32VS [JST]	
Cable	AWG28-24(insulator outer diameter 0.9-1.5mm)	

All data given are in line with the actual state of art and therefore not binding.
PiLink reserves the right to modify designs without giving the relevant reasons.

PL-R5 DIO IP20

Internal datails

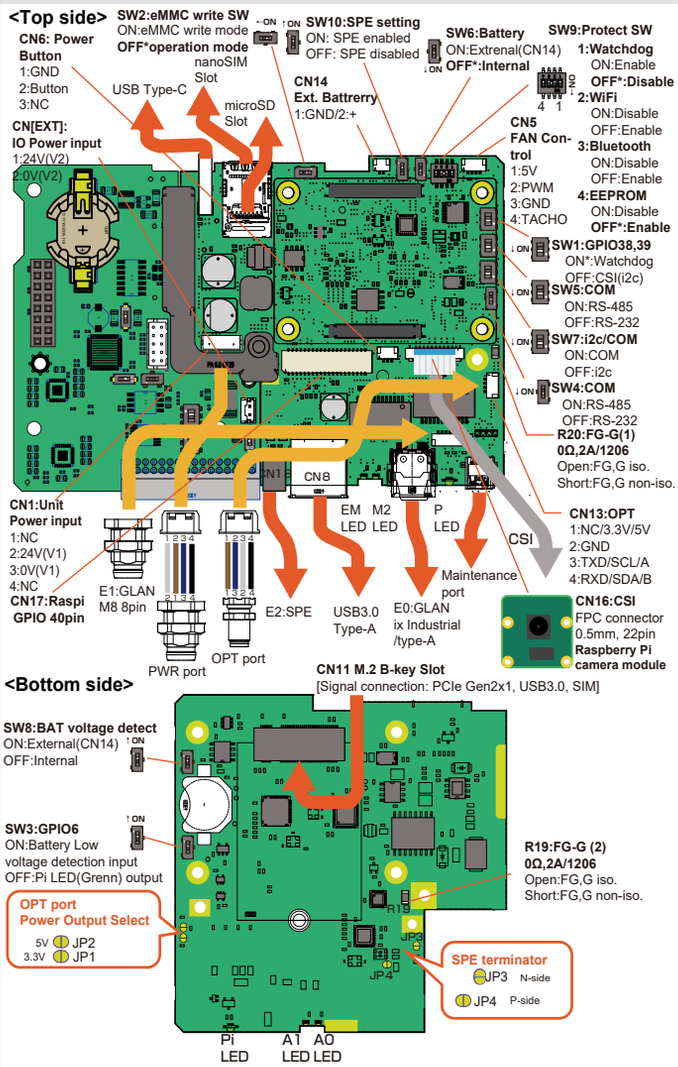

Device List

Main board side devices

Signal	Device	Poer/connection	Comments
E0:GLAN(iX)	CM5	eth0	10/100/1000Mbps
E1:GLAN(M8)	LAN7800-I	eth1	10/100/1000Mbps
E2:SPE(Terminal)*	LAN8651	eth2	10Mbps
E2:SPE MAC	AT24MAC402	i2c-1/0x30, 0x50,0x58	SPE MAC address eprom
Security IC	ATECC608B	i2c-1/0x60	
RTC	DS3231SN	i2c-1/0x68	
OPT:I2C	CM5/GPIO0,1	i2c-1/---	
OPT:RS-232	CP2102	ttyUSB0	3-wire max. 250kbps
OPT:RS-485	CP2102	ttyUSB0	2-wire max. 400kbps
CSI:I2C	CM5/GPI38,39	GPIO38,39/i2c-0	i2c1:GPIO38,39 / WD no-select
CSI	CM5/CAM1	CAM1	MIPI CSI-2 2-lanes
Pi LED(Green)	CM5	GPIO6/OUT	2 color LED : Pi LED(Green)とWD error LED(Red)/ OUT Heartbat initial setting
Low battery voltage	R3111N271A	GPIO6/IN	IN:Low battery voltage detection
WD Enable	MAX6373KA+T	GPIO38/Out	SET0 (SET1: Always High, SET2: Always Low)
WD Reset	MAX6373KA+T	GPIO39/Out	WD

Note: This may change depending on the Raspberry Pi OS.

IO expansion BASE board side device

Signal	Device	Poer/Address	Comments
Di0...Di15	MCP23S17	spidev1.0/0	BASE board
Do0...Do7	MCP23S17	spidev1.0/1	BASE board[Switchable to JP in 1.1/0]
spare	---	spidev1.1	BASE board
CAN0*	MCP2518FD	spidev0.0:can0	BASE board
CAN1*	MCP2518FD	spidev0.1:can1	BASE board
RTC,NVRAM*1	MCP74910	i2c-2/0x57,6F	BASE board [Recommend for use as NVRAM]
RS-232/485	TXD1,RXD1	ttyAMA0	BASE board RS232 3-wire max.250kbps RS485 2-wire max.500kbps

* SPE and CAN0,1 cannot be used simultaneously. You must choose one or the other. If you use CAN, please set SW10 on the carrier board to "OFF: SPE disabled" and also modify the device tree config.txt.

Internal DIP switch settings

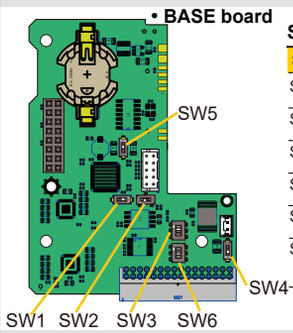

Switch setting list

SW	Name	Settings
SW1	Do signal select	**OFF*:PushPull Highspeed 0.1A** ON:Highside Low speed 0.5A
SW2	RS comm.	OFF:RS-232C **ON*:RS-485**
SW3	RS comm.	OFF:RS-232C **ON*:RS-485**
SW4	CAN0 Terminator	OFF:Terminator OFF **ON*:Terminator ON**
SW5	CAN1 Terminator	OFF:Terminator OFF **ON*:Terminator ON**
SW6	CAN1/Di select	Switch by product model selection **OFF*:1port** ON:2port

* : default setting

Dimensions and installation adapter

(unit: mm)

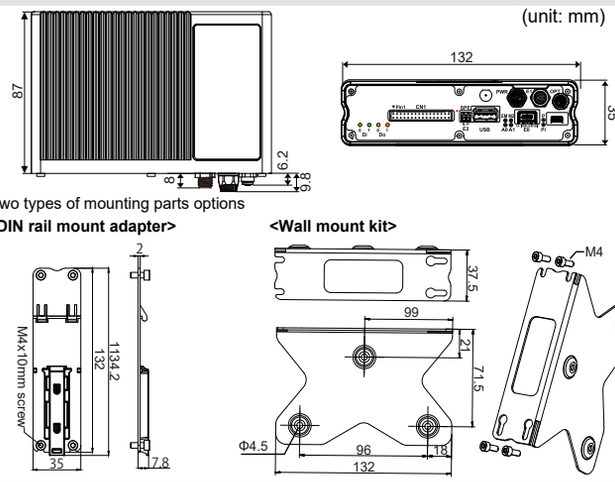

Optional accessories

Type	Name	Length	Part Number
PWR cable	M8 A-code 4pin female to open end	2m	Ha-SAF4-2
E0[GLAN] cable	ix plug to RJ45 plug	2m	IX10A12RJ45S
	ix plug to RJ45 jack	0.2m	T17001450IX
E1[GLAN] cable	M8 A-code 8pin male to RJ45 plug	2m	SAM82RJ45S
	M8 A-code 8pin male to RJ45 jack	0.2m	SAM802FRJ45S
OPT/IO cable	M5 4pin male to open end	2m	BAM-2S10HBK
Mount kit	DIN rail mount adapter	—	DINMNT01
	wall mount kit	—	WALMNT01
LTE Antenna	Monopole antenna IP20/TG.55.8113	Length 172mm	LANTIP2001
	Flat antenna IP67/GSA.8835.A.101111	Cable 1m	LANTIP6701
	Magnetic mount antenna IP65/GA.130.201111	Cable 2m	LANTIP6501
	3-in-1 antenna[GPS + 2x4G] IP67/MA256.A.LBI.001	Cable 2m	LANTIP6702

Ordering information

[Part Number] 6 R J D 1 2 0 0 R 7 4 1

- 6: 6:CM5 IP20 type
- R: R:Wired / W:Wired＋WireIss(WiFi/Bluetooth)
- J: Option(OPT) Interface
- D: EXT. interface COM port, CAN port
- 1: Add-on Software
- 2: RAM[GB]
- 0: eMMC[GB]
- R: revision number
- 7: Accessories
- 4: DIO model
- 1: revision number

Option(OPT) Interface	
1	**RS-232C[standard]**
2	I2C
3	RS-485

EXT. interface COM port, CAN port	
1	RS-232Cx1, CANx1port
2	**RS-485x1, CANx1port[standard]**
3	RS-232Cx1, CANx2port
4	RS-485x1, CANx2port

Add-on Software	
0	**None [fixed]**

RAM[GB]	
2	2
3	4
4	**8 [standard]**
5	16

eMMC[GB]	
2	16
3	32
7	**64 [standard]**
8	64/SSD128GB
9	64/SSD256GB
A	64/SSD512GB
B	64/SSD1TB

Accessories	
0	**None [standard]**
1	Reserved
L	LTE
8	Hailo8
9	Hailo8L

All data given are in line with the actual state of art and therefore not binding.
PiLink reserves the right to modify designs without giving the relevant reasons.

PL-R5 ISO-DIO IP20

Picture

Product Specifications

Processor		Broadcom BCM2712, Quad core-A76 @ 2.4GHz
Memory		RAM8GB, eMMC64GB (Depend on model)
OS		Raspberry Pi OS
Interface	Front	1x PWR : Power input, 2-line 2x LAN : GLAN[1000Mbps] x2ch 1x SPE : 10BASE-T1S x1ch 1x OPT : i2c/RS-232/485 selectable 1x USB : USB3.0 host Type-A 1x CN1 : 16ch Di (photocoupler input, 5V-24V DC) Selectable: External/+Common [NPN]/-Common [PNP] 1x CN2 : 8ch Do (photorelay output, max. 48V DC Max. 200mA @ 25°C) Selectable: External/+ Common [PNP]/- Common [NPN] 1x Maintenance: Maintenance Display port(Reserved) [Option]1x WLAN IEEE 802.11 b/g/n/ac, Bluetooth 5.0, BLE [Option]1x LTE(M.2 slot EM7431)
	Back	1x USB-C :USB Type-C(for eMMC writing) 1x SW :eMMC writing switch 1x microSD :microSD slot, 1x nanoSIM slot
	Inter nal	1x M.2 slot B-key* 1x CSI, 1xGPIO 40p, 1xFAN, 1x BAT, 1x SW
LED		P: Power status, A0,1:LAN status,EM:eMMC acces, Pi,U:User custom/WD error, M2:M2 access
RTC/NVRAM		BR1225[CR1225] Backup RTC
Watchdog		Built-in hardware watchdog
Power		Power rating DC12/24V, Range DC9V～40V/approx.15W
Temperature		Operating : -20～60 ℃, Storage : -25～85 ℃
Humidity		Operating : 0～95%(non-condensing)
IP grade		IP20
housing		Aluminum powder coating
Dimensions		W132 x D87 x H35 mm (excluding protrusions)
Weight		Approx. 530g
Vibration/shock		IEC 60068-2-6 / IEC 60068-2-27
EMI		Radiated emissions EN55016-2-3
EMS		Electrostatic radiation immunity EN 61000-4-2
		Radio frequency electromagnetic fields EN 61000-4-3
		Fast transient burst EN 61000-4-4
Installation		DIN rail mounting, wall mounting(Option)

* Not full pin connection. USB3.0, PCIe, SIM are connected.

Details of each part

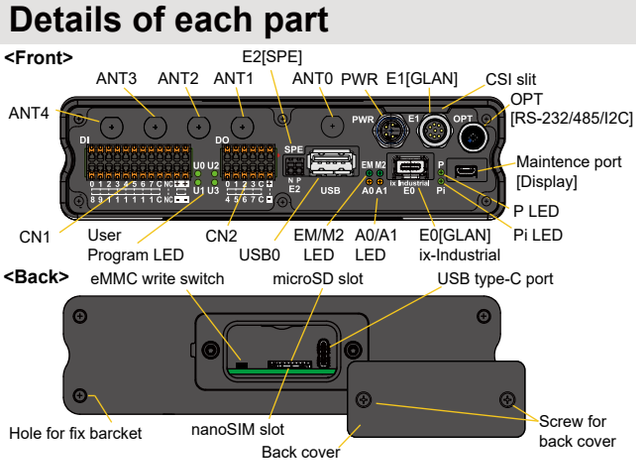

Features

-Industrial Raspberry Pi 5 (CM5)
-Wide power input DC9V to 40V
-Wide temperature range and high noise resistance
-Vibration-resistant, highly reliable M8 and M5, iX connectors
-Robust aluminum die-cast housing
-2 GLAN port and SPE (Single Pair Ethernet)
-USB 3.0 Type-A and USB 3.0 for internal bus
-Onboard eMMC, no SD memory is used for boot
-microSD slot for data storage
-Internal M.2 slot for SSD and WWAN expansion
-Raspi40p connector for expansion boards
-Battery-backed RTC
-Reliable hardware watchdog
-Wall mount and DIN rail mount compatible

Interface

<Connector pin layout>

PWR connector

M8 A-coded
4pin Male

Pin	Col.	Signal
1	BR	24VDC(V1)
2	WH	24VDC(V2)
3	BL	0V(V1)
4	BK	0V(V2)

V1: Main unit power supply,
V2: IO power supply

E0 connector [GLAN]

ix type-A
Jack

E2 connector [SPE]

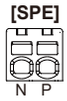

Pin	Signal	
	10/100M	1G
1	TX+	BI_DA+
2	TX-	BI_DA-
3	N.C.	GND
4	N.C.	BI_DC+
5	N.C.	BI_DC-
6	RX+	BI_DB+
7	RX-	BI_DB-
8	N.C.	GND
9	N.C.	BI_DD+
10	N.C.	BI_DD-

SPE Connection Cable
Twisted pair cable
24...22AWG / 0.2...0.33mm²
Impedance 100Ω

OPT connector

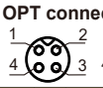

M5 A-code
4pin Female

Pin	Col.	i2c	RS232	RS485
1	BR	3.3V/5V/none*		
2	WH	SCL	TXD	A
3	BL	0V(RS232:SG		
4	BK	SDA	RXD	B

*1 pin for power output is no output by default.

E1 connector [GLAN]

M8 A-coded
8pin Female

Pin	Col.	Signal
1	WH/OR	TR0P
2	OR	TR0N
3	WH/GR	TR1P
4	BL	TR2P
5	WH/BL	TR2N
6	GR	TR1N
7	WH/BR	TR3P
8	BR	TR3N

CN1 <Digital input>
Connector:0156-1B24-BK

Pin	1	3	5	7	9	11	13	15	17	19	21	23
Signal	Di 0	Di 1	Di 2	Di 3	Di 4	Di 5	Di 6	Di 7	Di CA	NC	V2 24V	V2 24V
	Digital input A-Line								COM		Power Output	
Pin	2	4	6	8	10	12	14	16	18	20	22	24
Signal	Di 8	Di 9	Di 10	Di 11	Di 12	Di 13	Di 14	Di 15	Di CB	NC	V2 0V	V2 0V
	Digital input B-Line								COM			

CN2 <Digital output>
Connector:0156-12-BK

Pin	1	3	5	7	9	11
Signal	Do 0	Do 1	Do 2	Do 3	Do CA	V2 24V Power Output
	Digital output A-Line				COM	
Pin	2	4	6	8	10	12
Signal	Do 4	Do 5	Do 6	Do 7	Do CB	V2 0V
	Digital output B-Line				COM	

Note) The default rating for each digital output is 0.2A. Ensure that the total current does not exceed 2A. For protection purposes, an automatic reset fuse is built into the device. The applicable cable for the connector is AWG30...20/0.2...0.5mm2.

GPIO[Internal]
RasPi GPIO 40-pin (same layout as Raspberry Pi 40-pin BM40B-SRDS-G-TF)

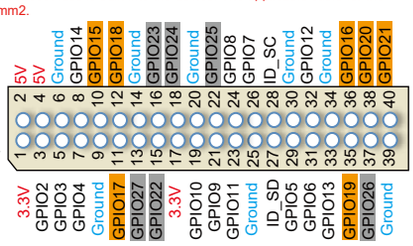

System Connection
System IO Connection

The GPIO of the CM5 is 3.3V level. The total GPIO load is up to 50mA. For detailed specifications, please refer to the CM5 datasheet.

LED

LED	Sts.	Comments
P(GR)	Off	Power Down
	On	Power OK
P(RD)	Off	Power status OK
	Blk	Power status NG
	On	Starting, stopping
A0(OR)	Blk	E0 active
A1(OR)	Blk	E1 active
Pi(RD)	Off	WD OK
	On	WD error
Pi(GR)	Off	User OFF
	On	User ON
U0...3	Off	User OFF
	On	User ON
	On	User ON

CSI [Internal]

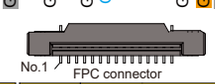

Pin	Signal	Pin	Signal
1	GND	9	CAM1_C_P
2	CAM1_D0_N	10	GND
3	CAM1_D0_P	11	CAM_GPIO
4	GND	12	NC
5	CAM1_D1_N	13	I2C1_SCL[GPIO45]
6	CAM1_D1_P	14	I2C2_SDA[GPIO44]
7	GND	15	3.3V
8	CAM1_C_N	16-30	NC

ANT SMA port[option]

Type	ANT4	ANT3	ANT2	ANT1	ANT0
Wired LAN	-	-	-	-	-
Wired LAN+LTE	Main	GNSS	Aux	-	-
Wired/Wireles LAN	WL/BT	-	-	-	-
Wired/Wireles LAN＋LTE	Main	GNSS	Aux	-	WL/BT

All data given are in line with the actual state of art and therefore not binding.
PiLink reserves the right to modify designs without giving the relevant reasons.

PL-R5 ISO-DIO IP20

Internal circuit

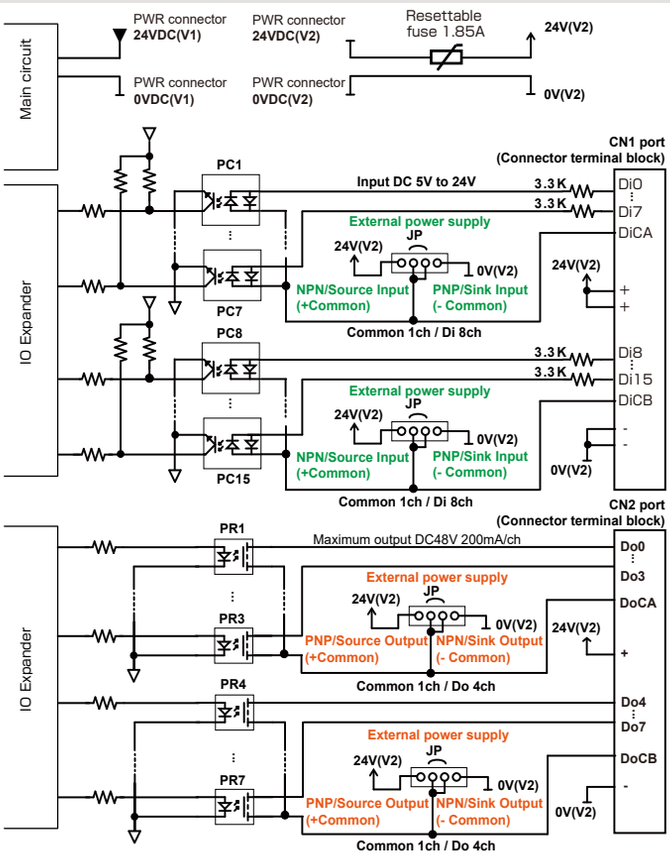

If an uncharged common type other than NPN or PNP is selected, DiCA and DiCB are isolated from each other. Similarly, DoCA and DoCB are also isolated from each other. This is useful when using different power supplies or when you want to isolate the power supplies. The GND of V1 and V2 is connected internally.

Wiring example

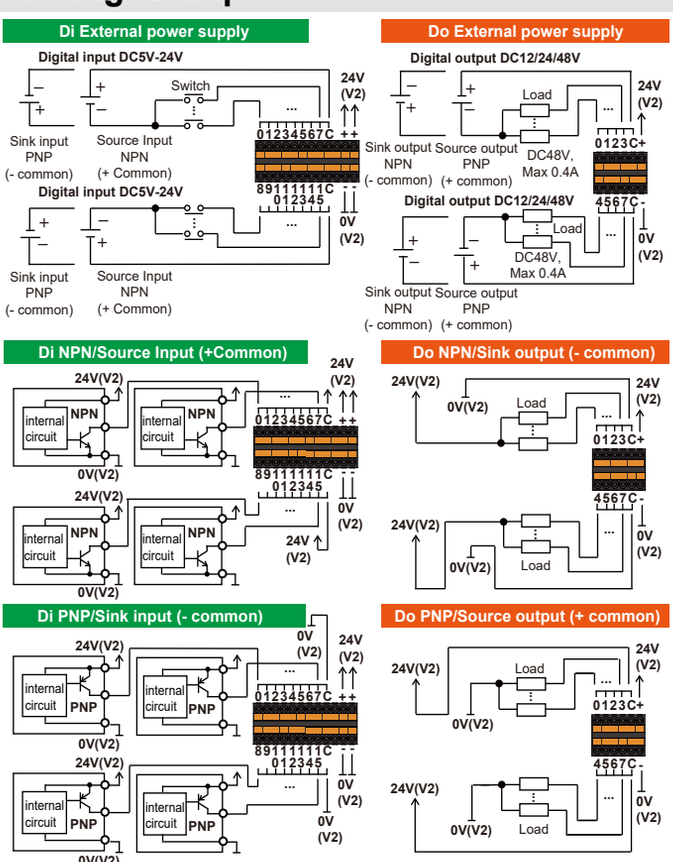

IO expansion board side device

Signal	Device	Port/Address	Comments
Di0...Di15	MCP23S17	spidev1.0/0 SPI:GPIO17,19,20,21 INT:GPIO15	Di0[bit0]...Di15[bit15] Do0[bit0]...Do7[bit7]
Do0...Do7 U0...U3	MCP23S17	spidev1.1/0 SPI:GPIO18,19,20,21 INT:GPIO16	LED U0-Green[bit8]/U0-Red[bit9] LED U1-Green[bit10]/U1-Red[bit11] LED U2-Green[bit12]/U2-Red[bit13] LED U3Green[bit14]/U3-Red[bit15]

Dimensions and installation adapter

(unit: mm)

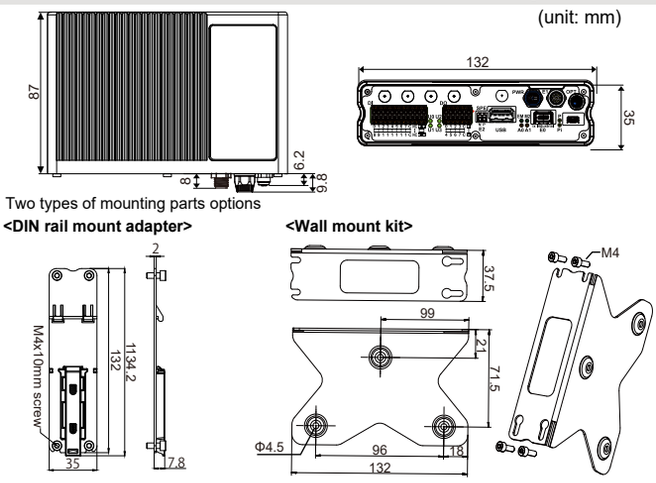

Optional accessories

Type	Name	Length	Part Number
PWR cable	M8 A-code 4pin female to open end	2m	Ha-SAF4-2
E0[GLAN] cable	ix plug to RJ45 plug	2m	IX10A12RJ45S
	ix plug to RJ45 jack	0.2m	T17001450IX
E1[GLAN] cable	M8 A-code 8pin male to RJ45 plug	2m	SAM82RJ45S
	M8 A-code 8pin male to RJ45 jack	0.2m	SAM802FRJ45S
OPT/IO cable	M5 4pin male to open end	2m	BAM-2S10HBK
Mount kit	DIN rail mount adapter	—	DINMNT01
	wall mount kit	—	WALMNT01
LTE Antenna	Monopole antenna IP20/TG.55.8113	Length 172mm	LANTIP2001
	Flat antenna IP67/GSA.8835.A.101111	Cable 1m	LANTIP6701
	Magnetic mount antenna IP65/GA.130.201111	Cable 2m	LANTIP6501
	3-in-1 antenna[GPS + 2x4G] IP67/MA256.A.LBI.001	Cable 2m	LANTIP6702

Ordering information

[Part Number] 6RIS1100R741

- 6: CM5 IP20 type
- R: Wired
- W: WIre/Wireless(WiFi/Bluetooth)
- revision number
- Iso. DIO model

RAM[GB]	
2	2
3	4
4	**8 [standard]**
5	16

eMMC[GB]	
2	16
3	32
7	**64 [standard]**
8	64/SSD128GB
9	64/SSD256GB
A	64/SSD512GB
B	64/SSD1TB

Option(OPT) Interface	
1	**RS-232C[standard]**
2	I2C
3	RS-485

EXT. interface Di,Do type select	
0	Di,Do External power supply
1	**Di NPN, Do:NPN[standard]**
2	Di NPN, Do:PNP
3	Di PNP, Do:NPN
4	Di PNP, Do:PNP

Add-on Software	
0	**None [fixed]**

Accessories	
0	**None [standard]**
1	Reserved
L	LTE
8	Hailo8
9	Hailo8L

All data given are in line with the actual state of art and therefore not binding.
PiLink reserves the right to modify designs without giving the relevant reasons.

PL-R5 DIO CAN IP65

Picture

Product Specifications

Processor		Broadcom BCM2712, Quad core-A76 @ 2.4GHz
Memory		RAM8GB, eMMC64GB (Depend on model)
OS		Raspberry Pi OS
Interface	Front	1x PWR : Power input, 2-line 1x LAN : GLAN[1000Mbps] x1ch 1x OPT : i2c/RS-232/485 selectable 1x USB : USB3.0 Host Type-A 4x IO : M5 IO port [Di(PNP)x2ch,Do(PNP)x2ch, CANx2ch] [Option]1x WLAN IEEE 802.11 b/g/n/ac, Bluetooth 5.0, BLE [Option]1x LTE(M.2 slot/EM7431)
	Back	1x USB-C : USB Type-C(eMMC writing only) 1x SW : eMMC write switch 1x microSD : microSD slot 1x nanoSIM slot
	Inter nal	1x M.2 slot B-key* 1x CSI, 1xGPIO 40p, 1xFAN, 1x BAT, 1x SW
LED		P: Power status, A1: LAN status Pi : User custom/WD error, DIO status,
RTC/NVRAM		BR1225[CR1225] Backup RTC
Watchdog		Built-in hardware watchdog
Power		Power rating :DC12/24V, Range : DC9V～40V / Approx.15W
Temperature		Operating : -20～60 ℃, Storage : -25～85 ℃
Humidity		Operating : 0～95%(non-condensing)
IP grade		IP65
housing		Aluminum powder coating
Dimensions		W132 x D88.7x H35 mm (excluding protrusions)
Weight		Approx. 540g
Vibration/shock		IEC 60068-2-6 / IEC 60068-2-27
EMI		Radiated emissions EN55016-2-3
EMS		Electrostatic radiation immunity EN 61000-4-2
		Radio frequency electromagnetic fields EN 61000-4-3
		Fast transient burst EN 61000-4-4
Installation		DIN rail mounting, wall mounting(Option)

*This is not a full pin connection. USB3.0, PCIe, SIM are connected.

Details of each part

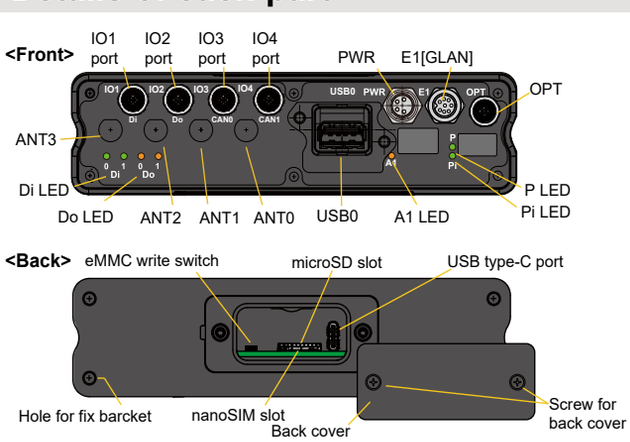

Features

-Industrial Raspberry Pi 5 (CM5)
-Wide power input DC9V to 40V
-Wide temperature range and high noise resistance
-Vibration-resistant, highly reliable M8 and M5 connectors
-Rugged IP65 waterproof aluminum diecast housing
-1GLAN port
-USB 3.0 Type-A and USB 3.0 for internal bus
-Onboard eMMC, no SD memory is used for boot
-microSD slot for data storage
-Internal M.2 slot for SSD and WWAN expansion
-Raspi40p connector for expansion boards
-Battery-backed RTC
-Reliable hardware watchdog
-Wall mount and DIN rail mount compatible

Interface

<Connector pin layout>

PWR connector

M8 A-coded 4pin Male

Pin	Col.	Signal
1	BR	24VDC(V1)
2	WH	24VDC(V2)
3	BL	0V(V1)
4	BK	0V(V2)

V1: Main unit power supply
V2: IO power supply (not used by this unit)

OPT connector

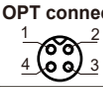

M5 A-code 4pin Female

Pin	Col.	i2c	RS232	RS485
1	BR	3.3V/5V/none*		
2	WH	SCL	TXD	A
3	BL	0V(RS232:SG		
4	BK	SDA	RXD	B

* pin for power output is no output by default.

E1 connector [GLAN]

M8 A-coded 8pin Male

Pin	Col.	Signal
1	WH/OR	TR0P
2	OR	TR0N
3	WH/GR	TR1P
4	BL	TR2P
5	WH/BL	TR2N
6	GR	TR1N
7	WH/BR	TR3P
8	BR	TR3N

LED

LED	Col.	Comments
P(GR)	Off	Power Down
	On	Power OK
P(RD)	Off	Power status OK
	Blk	Power status NG
	On	Starting, stopping
A1(OR)	Blk	E1 active
Pi(RD)	Off	WD OK
	On	WD error
Pi(GR)	Off	User OFF
	On	User ON
Di0,1	Off	Di OFF
	On	Di ON
Do0,1	Off	Do OFF
	On	Do ON

IO connector

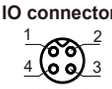

M5 A-code 4pin Female

Pin	Col.	IO1	IO2	IO3	IO4
1	BR	24V(V2)	NC	NC	NC
2	WH	Di0	Do0	CAN0+	CAN1+
3	BL	0V(V2)	0V(V2)	NC	NC
4	BK	Di1	Do1	CAN0-	CAN1-

Note) The default rating for each digital output is 0.1A. Please ensure that the total current does not exceed 1A. For protection purposes, an automatic reset fuse is built into the device.

CSI [Internal]

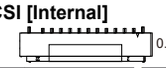

0.5mm pitch 22-pole FPC connector

Pin	Signal	Pin	Signal	Pin	Signal
1	GND	9	CAM1_C_P	17	CAM_GPIO0
2	CAM1_D0_N	10	GND	18	CAM_GPIO1
3	CAM1_D0_P	11	CAM1_D2_N	19	GND
4	GND	12	CAM1_D2_P	20	I2C0_SCL
5	CAM1_D1_N	13	GND	21	I2C0_SDA
6	CAM1_D1_P	14	CAM1_D3_N	22	+3.3V
7	GND	15	CAM1_D3_P		
8	CAM1_C_N	16	GND		

ANT SMA port[option]

Type	ANT3	ANT2	ANT1	ANT0
Wired LAN	-	Not possible		
Wired LAN+LTE	Main			
Wired LAN+Wireless LAN	WL/BT			
Wired LAN+Wireless LAN+LTE	None			

GPIO[Internal]

RasPi GPIO40pin
(Same layout as Raspi 40-pin connector BM40B-SRDS-G-TF)

System Connection [SD]
System IO Connection [IO]

The CM5's GPIO is 3.3V level.
The total GPIO load is up to 50mA.
For detailed specifications, please refer to the CM5 datasheet.

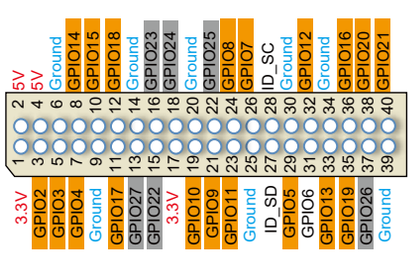

All data given are in line with the actual state of art and therefore not binding.
PiLInk reserves the right to modify designs without giving the relevant reasons.

PL-R5 DIO CAN IP65

Internal datails

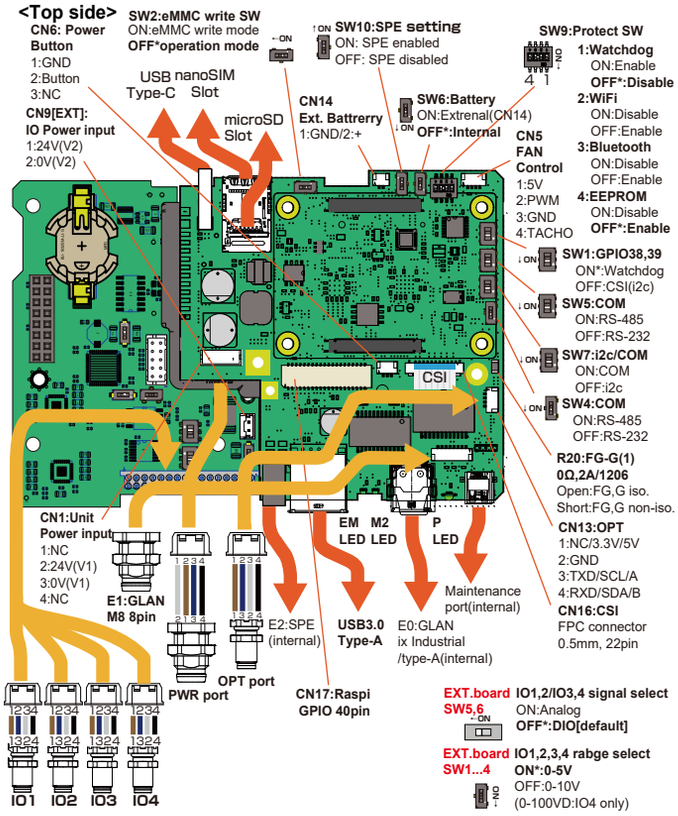

Device List

Signal	Device	Port or connection	Comments
E0:GLAN(iX)	CM5	eth0	10/100/1000Mbps(Internal, no available)
E1:GLAN(M8)	LAN7800-I	eth1	10/100/1000Mbps
E2:SPE(Terminal)	LAN8651	eth2	10Mbps(Internal, no available)
Security IC	ATECC608B	i2c-0/0x60	i2c0:GPIO0,1
RTC	DS3231SN	i2c-0/0x68	i2c0:GPIO0,1
OPT:I2C	CM5/GPIO0,1	i2c-0/---	i2c0:GPIO0,1
OPT:RS-232	CP2102	ttyUSB0	3-wire Max.250kbps
OPT:RS-485	CP2102	ttyUSB0	2-wire Max.400kbps
CSI:I2C	CM5/GPIO38,39	GPIO38,39/i2c-1	i2c1:GPIO38,39 / WD nouse
CSI	CM5/CAM1	CAM1	MIPI CSI-2 2-lanes
Pi LED(Green)	CM5	GPIO6/Out	2-color LED: Pi LED (green) and WD Error LED (red), Defaults to OUT heartbeat
Low battery	R3111N271A	GPIO6/IN	IN: Low battery voltage input
WD Enable	MAX6373KA+T	GPIO38/Out	SET0 (SET1:normal High, SET2:normal Low)
WD Reset	MAX6373KA+T	GPIO39/Out	WD
Di0,1	CM5	GPIO16,17/In	Photo input: 5V to 24V DC, +/- common
Do0,1	CM5	GPIO18,19/Out	Photorelay output: Maximum 48V DC, 250mA, +/- common
Ai0,1,2,3	ADS1 1 15	i2c-1/0x48	16-bit resolution, 4-ch input, 0-5V/0-32000cnt FSR = ±2.048V, single-ended

Note: This may change depending on the Raspberry Pi OS.

Watchdog (WD) timer and CSI connection

SW1: Watchdog or CSI can be switched by selecting GPIO38,39. Watchdog (WD) and CSI cannot be used at the same time. When WD is selected, GPIO38 and 39 are used for WD operation. In addition, when SW9: No.1 of protection SW is off, the reset is forcibly disabled. When CSI is selected, GPIO38 and 39 are used as i2c for CSI.
[Reference] For the factory image, please refer to the WD program /home/pi/wdrst.py.

Dimensions and installation adapter

(unit : mm)

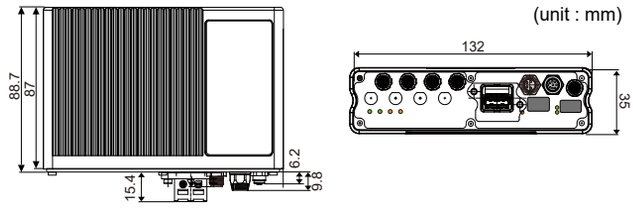

Two types of mounting parts options

<DIN rail mount adapter>

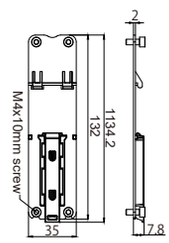

<Wall mount kit>

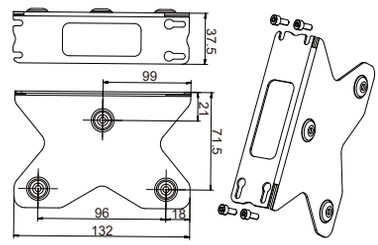

Optional accessories

Type	Name		Length	Part Number
PWR cable	M8 A-code 4-pin female to open end		2m	Ha-SAF4-2
E1[GLAN] cable	M8 A-code 8 pin male to RJ45 Plug		2m	SAM82RJ45S
OPT/IO cable	M5 4-pin male to open end		2m	BAM-2S10HBK
PushPull cable	PushPull USB ～standard USB 3.0 Type-A male		2m	09454452913
PushPull Dust cap	PushPull dust cap		Short	09 45 845 0009
			Long	09 45 845 0015
Dust cap	M8 Male(PWR) port IP67			CAPM8M6701
	M8 Female(E1) port IP67			CAPM8F6701
	M5 Female(OPT, IO) port IP67			CAPM5F6701
Mount kit	DIN rail mount adapter			DINMNT01
	wall mount kit			WALMNT01
LTE Antenna	Flat antenna IP67/GSA.8835.A.101111		Cable 1m	LANTIP6701
	Magnetic mount antenna IP65/GA.130.201111		Cable 2m	LANTIP6501
	3-in-1 antenna[GPS + 2x4G] IP67/MA256.A.LBI.001		Cable 2m	LANTIP6702
	Waterproof monopole antenna	L-type IP67/1018-532A	Length 104mm	LANTIP6703
		Straight-type IP67/1018-531A	Length 100mm	LANTIP6704
WiFi/BT Antenna	Waterproof monopole antenna	L-type IP67/T13-047-1051	Length 104mm	WANTIP67L
		Straight-type IP67/T13-047-1050	Length 100mm	WANTIP67S

Optional accessories

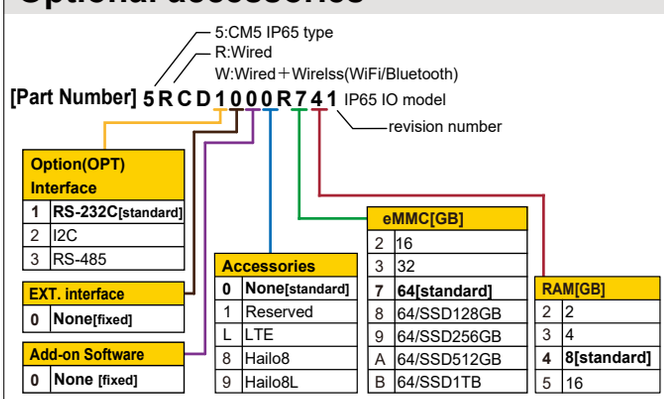

All data given are in line with the actual state of art and therefore not binding.
PiLink reserves the right to modify designs without giving the relevant reasons.

PL-R5 Multi IO IP20

Picture

Product Specifications

Processor		Broadcom BCM2712, Quad core-A76 @ 2.4GHz
Memory		RAM8GB, eMMC64GB (Depend on model)
OS		Raspberry Pi OS
Interface	Front	1x PWR : Power input, 2-line 2x LAN : GLAN[1000Mbps] x2ch 1x SPE : 10BASE-T1S x1ch 1x OPT : i2c/RS-232/485 selectable 1x USB : USB3.0 host Type-A 1x CN1 : Di 16ch [14ch](PNP)/2.4mA at 24VDC Do 8ch(PNP)/Pushpull0.1A,High-side0.5A COM 1ch RS-232/RS485 (half duplex) switching CAN 1 or 2ch/CAN 2.0B, CAN FD 1Mbps 1x CN2 : Di 4ch(NPN)/7.2 mA at 24VDC Do 4ch (PNP)/High-side0.5A, pushpull0.1A Ai 4ch resolution 16bit (0-5/0-10VDC switching) Note) ch3 only 0-5/0-100VDC switching Ao 2ch resolution 12bit (0-5/0-10VDC switching) SPI 1ch/ max. 12Mbps 1x PRG : STM32 programing port 1x Maintenance: Maintenance Display port(Reserved) [Option]1x WLAN IEEE 802.11 b/g/n/ac, Bluetooth 5.0, BLE [Option]1x LTE(M.2 slot EM7431)
	Back	1x USB-C :USB Type-C(for eMMC writing) 1x SW :eMMC writing switch 1x microSD :microSD slot, 1x nanoSIM slot
	Inter nal	1x M.2 slot B-key* 1x CSI, 1xGPIO 40p, 1xFAN, 1x BAT, 1x SW
LED		P: Power status, A0,1: LAN status, Pi:User custom/ WD error, EM:eMMC access, M2:M2access DIO status, USR:STM LED, RST:STM reset
RTC/NVRAM		BR1225[CR1225] Backup RTC MCP79410-I:CR1632 Backup RTC, NVRAM
Watchdog		Built-in hardware watchdog
Power		Power rating DC12/24V, Range DC9V～40V/approx.15W
Temperature		Operating : -20～60 ℃, Storage : -25～85 ℃
Humidity		Operating : 0～95%(non-condensing)
IP grade		IP20
housing		Aluminum powder coating
Dimensions		W132 x D87 x H35 mm (excluding protrusions)
Weight		Approx. 550g
Vibration/shock		IEC 60068-2-6 / IEC 60068-2-27
EMI		Radiated emissions EN55016-2-3
EMS		Electrostatic radiation immunity EN 61000-4-2
		Radio frequency electromagnetic fields EN 61000-4-3
		Fast transient burst EN 61000-4-4
Installation		DIN rail mounting, wall mounting(Option)

* Not full pin connection. USB3.0, PCIe, SIM are connected.

Details of each part

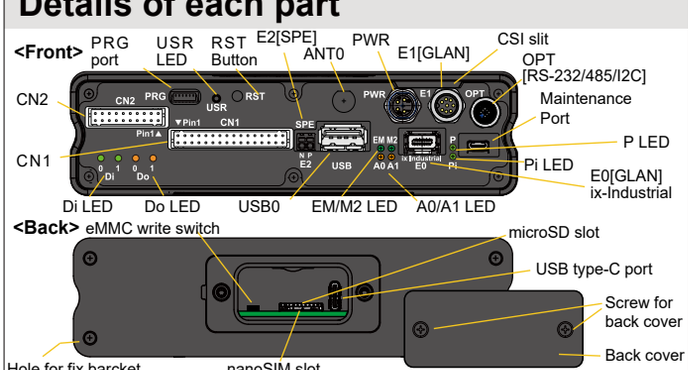

Features

-Industrial Raspberry Pi 5 (CM5)
-Wide power input DC9V to 40V
-Wide temperature range and high noise resistance
-Vibration-resistant, highly reliable M8 and M5, iX connectors
-Robust aluminum die-cast housing
-GLAN 2ch, SPE/CAN, DIO/AIO, and serialcommunication
-USB 3.0 Type-A and USB 3.0 for internal bus
-Onboard eMMC, no SD memory is used for boot
-microSD slot for data storage
-Internal M.2 slot for SSD and WWAN expansion
-Raspi40p connector for expansion boards
-Battery-backed RTC
-Reliable hardware watchdog
-Wall mount and DIN rail mount

Interface

<Connector pin layout>

PWR connector

M8 A-coded
4pin Male

Pin	Col.	Signal
1	BR	24VDC(V1)
2	WH	24VDC(V2)
3	BL	0V(V1)
4	BK	0V(V2)

V1: Main unit power supply
V2: IO power supply (not used by this unit)

OPT connector

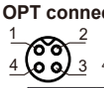

M5 A-code
4pin Female

Pin	Col.	i2c	RS232	RS485
1	BR	3.3V/5V/none*		
2	WH	SCL	TXD	A
3	BL	0V(RS232:SG		
4	BK	SDA	RXD	B

*1 pin for power output is no output by default.

E0 connector [GLAN]

ix type-A
Jack

Pin	Signal 10/100M	Signal 1G
1	TX+	BI_DA+
2	TX-	BI_DA-
3	N.C.	GND
4	N.C.	BI_DC+
5	N.C.	BI_DC-
6	RX+	BI_DB+
7	RX-	BI_DB-
8	N.C.	GND
9	N.C.	BI_DD+
10	N.C.	BI_DD-

E1 connector [GLAN]

M8 A-coded
8pin Female

Pin	Col.	Signal
1	WH/OR	TR0P
2	OR	TR0N
3	WH/GR	TR1P
4	BL	TR2P
5	WH/BL	TR2N
6	GR	TR1N
7	WH/BR	TR3P
8	BR	TR3N

E2 connector [SPE]

Twisted pair cable
24...22AWG
0.2...0.33mm²
Impedance 100Ω

CN1 port
[PHD 32pin connector/JST]

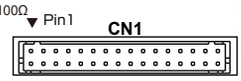

Harness side
-32-pin housing: PHDR-32VS
-Contact: BPHD/SPHD-001T-P0.5
AWG 26...22 / Insulation OD 1.0...1.5mm
-Contact: BPHD/SPHD-002T-P0.5
AWG 28...24 / Insulation OD 0.9...1.5mm

Pin	1	3	5	7	9	11	13	15*	17	19	21	23	25	27	29	31
Signal	Di 0	Di 2	Di 4	Di 6	Di 8	Di 10	Di 12	Di14 or CAN 1+	Di Do	Do 0	Do 2	Do 4	Do 6	RS232(Tx) /RS485(+)	RS232/ 485 SG	CAN 0+
	Digital Input(PNP)								GND	Digital Output((PNP)						
Pin	2	4	6	8	10	12	14	16*	18	20	22	24	26	28	30	32
Signal	Di 1	Di 3	Di 5	Di 7	Di 9	Di 11	Di 13	Di15 or CAN 1-	Di Do	Do 1	Do 3	Do 5	Do 7	RS232(Rx) /RS485(-)	Di COM DC24V	CAN 0-
	Digital Input((PNP)								GND	Digital Output((PNP)						

*: The signal changes depending on the CAN1/2 port model selected.

⚠ **Note) The default rating for each digital output is 0.1A. Please ensure that the total current does not exceed 1A. For protection purposes, an automatic reset fuse is built into the device.**

CN2 port
[PHD 20pin connector/JST]

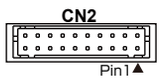

Harness side
-20-pin housing: PHDR-20VS
-Contact: BPHD/SPHD-001T-P0.5
AWG 26...22 / Insulation OD 1.0...1.5mm
-Contact: BPHD/SPHD-002T-P0.5
AWG 28...24 / Insulation OD 0.9...1.5mm

Pin	1	3	5	7	9	11	13	15	17	19
Signal	STM Di0	STM Di2	STM Di,Do GND	Ai0	Ai2	STM Do0	STM Do2	Ao0	CS1	MISO
	STM Digital Input (NPN)			Analog input		STM Digital Output (PNP)		Analog output	SPI	
Pin	2	4	6	8	10	12	14	16	18	20
Signal	STM Di1	STM Di3	Ai,Ao GND	Ai1	Ai3	STM Do1	STM Do3	Ao1	SCK	MOSI
	STM Digital Input (NPN)			Analog input		STM Digital Output (PNP)		Analog output	SPI	

Note) The GND of Di, Do, STM-Di, Do, Ai, Ao, SPi, and SG are connected.

PRG port
[SH 6pin connector/JST]

Pin	1	2	3	4	5	6
Signal	3.3V Passive	SWCLK in	GND	SWDIO io	NRST in	SWO out
	STLINK					

Harness side
6-pin housing: SHR-06V-S
or SHR-06V-S-B
Contact: SSH-003T-P0.2-H
AWG 32...28
/Insulation outer diameter
Φ 0.4...0.8mm

GPIO[Internal]

RasPi GPIO40pin
(Same layout as Raspi 40-pin connector BM40B-SRDS-G-TF)

System Connection [SD]
System IO Connection [IO]

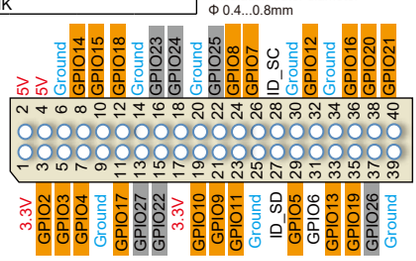

All data given are in line with the actual state of art and therefore not binding.
PiLink reserves the right to modify designs without giving the relevant reasons.

PL-R5 Multi IO IP20

LED

LED	Sts.	Comments
P(GR)	Off	Power Down
	On	Power OK
P(RD)	Off	Power status OK
	Blk	Power status NG
	On	Starting, stopping
A0(OR)	Blk	E0 active
A1(OR)	Blk	E1 active
Pi(RD)	Off	WD OK
	On	WD error
Pi(GR)	Off	User OFF
	On	User ON
EM(GR)	Off	eMMC acces
	On	status
M2(GR)	Off	M2 acces
	On	status

LED	Sts	Comments
Di0,1	Off	Di OFF
	On	Di ON
Do0,1	Off	Do OFF
	On	Do ON

ANT SMA port[option]

Type	ANT0
Wired LAN	-
Wired LAN+LTE	Main
Wired LAN+Wireless LAN	WL/BT
Wired LAN+Wireles LAN+LTE	None

CSI[Internal]

FPC connector 0.5mm pitch 22-pole

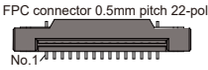

CN1,2 connection device list [reference]

Type	Manufacturer Tools	Third-party tools
Tools	YRS-620 [JST]	SN-01BM [IWISS]
Termnal	SPHD-002T-P0.5[JST]	BPHD-002T-P0.5[JST]
Connector	CN1 PHDR-32VS [JST] CN2 PHDR-20VS [JST]	
Cable	AWG28-24(insulator outer diameter 0.9-1.5mm)	

Device List

Main board side devices

Signal	Device	Poer/connection	Comments
E0:GLAN(iX)	CM5	eth0	10/100/1000Mbps
E1:LAN(M8)	LAN7800-I	eth1	10/100/1000Mbps
E2:SPE(Terminal)*3	LAN8651	eth2	10Mbps
E2:SPE MAC	AT24MAC402	i2c-1/0x30, 0x50,0x58	SPE MAC address eprom
Security IC	ATECC608B	i2c-1/0x60	
RTC	DS3231SN	i2c-1/0x68	
OPT:I2C	CM5/GPIO0,1	i2c-1/---	
OPT:RS-232	CP2102	ttyUSB0	3-wire max. 250kbps
OPT:RS-485	CP2102	ttyUSB0	2-wire max. 400kbps
CSI:I2C	CM5/GPI38,39	GPIO38,39/i2c-0	i2c1:GPIO38,39 / WD no-select
CSI	CM5/CAM1	CAM1	MIPI CSI-2 2-lanes
Pi LED(Green)	CM5	GPIO6/OUT	2 color LED : Pi LED(Green)とWD error LED(Red)/ OUT Heartbat initial setting
Low battery voltage	R3111N271A	GPIO6/IN	IN:Low battery voltage detection
WD Enable	MAX6373KA+T	GPIO38/Out	SET0 (SET1: Always High, SET2: Always Low)
WD Reset	MAX6373KA+T	GPIO39/Out	WD

Note: This may change depending on the Raspberry Pi OS.

IO expansion BASE/SUB board side device

Signal	Device	Poer/Address	Comments
Di0...Di15	MCP23S17	spidev1.0/0	BASE board
Do0...Do7	MCP23S17	spidev1.0/1	BASE board[Switchable to JP in 1.1/0]
spare	---	spidev1.1	BASE board
Ext.SPI	---	spidev1.2	SUB board
CAN0*3	MCP2518FD	spidev0.0:can0	BASE board
CAN1*3	MCP2518FD	spidev0.1:can1	BASE board
Ai0...Ai3	ADS1115	i2c-1/0x48	SUB board
Ao0...Ao1	MCP4728	i2c-2/0x60	SUB board
RTC,NVRAM*1	MCP74910	i2c-2/0x57,6F	BASE board [Recommend for use as NVRAM]
RS-232/485	TXD1,RXD1	ttyAMA0	BASE board RS232 3-wire max.250kbps RS485 2-wire max.500kbps
STM32 VCOM	STM32-VCOM	ttyACM0	SUB board max.921.6kbps[vcom]
STM32 DIO*2	STM GPIO	---	SUB board

*1 If you use MCP74910 on the Raspberry Pi OS side, you cannot connect to NVRAM on the Codesys side.
*2 The default protocol for accessing STM32 IO and LEDs is ModbusRTU.
*3 SPE and CAN0,1 cannot be used simultaneously. You must choose one or the other. If you use CAN, please set SW10 on the carrier board to "OFF: SPE disabled" and also modify the device tree config.txt.

STM32 ModbusRTU Link Map (Slave Address 1)

Digital Input Holding Register

memory offset word/bit	STM32 link
0/0...7(NC8...15)	Di0 ～ Di7
1～9/0..15	Reserved

Digital Output Holding Register

memory offset word/bit	STM32 link
10/0...3(NC 4...15)	Do0 ～ Do3
11/0...1(NC 2...15)	LED Red, Green
12～19/0...15	Reserved

Dimensions and installation adapter

(unit: mm)

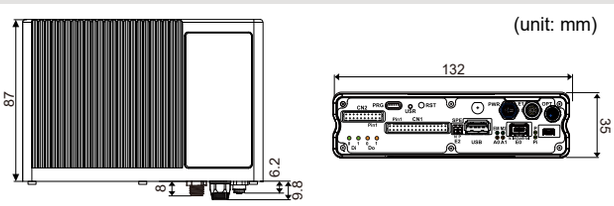

Two types of mounting parts options

<DIN rail mount adapter>

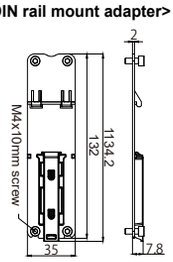

<Wall mount kit>

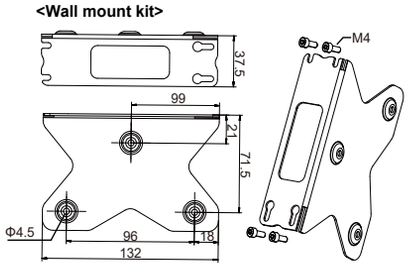

Internal DIP switch settings

The board on the left side inside the main unit is the IO board. The DIO model only has the BASE board installed. By flipping the switch, you can select the analog range or serial communication.

• **BASE board**

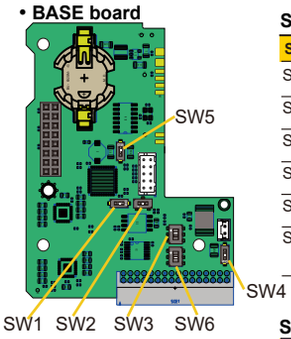

Switch setting list

SW	Name	Settings
SW1	Do signal select	**OFF*:PushPull Highspeed 0.1A** ON:Highside Low speed 0.5A
SW2	RS comm.	OFF:RS-232C **ON*:RS-485**
SW3	RS comm.	OFF:RS-232C **ON*:RS-485**
SW4	CAN0 Terminator	OFF:Terminator OFF **ON*:Terminator ON**
SW5	CAN1 Terminator	OFF:Terminator OFF **ON*:Terminator ON**
SW6	CAN1/Di select	Switch by product model selection **OFF*:1port** ON:2port

* : default setting

SUB board

(not implemented on DIO model)

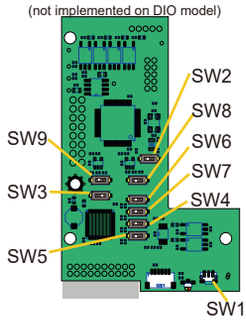

Switch setting list

SW	Name	Settings
SW1	STM32 Reset	**OFF*:Disabled** ON:Enable
SW2	STM3 Boot0	OFF:Disable **ON*:User Flash**
SW3	Do Signal select	**OFF*:PushPull High speed 0.1A** ON:Highside Low speed 0.5A
SW4	Ai0	OFF:0-10VDC **ON*:0-5VDC**
SW5	Ai1	OFF:0-10VDC **ON*:0-5VDC**
SW6	Ai2	OFF:0-10VDC **ON*:0-5VDC**
SW7	Ai3	OFF:0-100VDC **ON*:0-5VDC**
SW8	Ao0	OFF:0-10VDC **ON*:0-5VDC**
SW9	Ao1	OFF:0-10VDC **ON*:0-5VDC**

* : default setting

Optional accessories

Type	Name	Length	Part Number
PWR cable	M8 A-code 4pin female to open end	2m	Ha-SAF4-2
E0[GLAN] cable	ix plug to RJ45 plug	2m	IX10A12RJ45S
	ix plug to RJ45 jack	0.2m	T17001450IX
E1[GLAN] cable	M8 A-code 8pin male to RJ45 plug	2m	SAM82RJ45S
	M8 A-code 8pin male to RJ45 jack	0.2m	SAM802FRJ45S
OPT/IO cable	M5 4pin male to open end	2m	BAM-2S10HBK
Mount kit	DIN rail mount adapter	—	DINMNT01
	wall mount kit	—	WALMNT01
LTE Antenna	Monopole antenna IP20/TG.55.8113	Length 172mm	LANTIP2001
	Flat antenna IP67/GSA.8835.A.101111	Cable 1m	LANTIP6701
	Magnetic mount antenna IP65/GA.130.201111	Cable 2m	LANTIP6501
	3-in-1 antenna[GPS + 2x4G] IP67/MA256.A.LBI.001	Cable 2m	LANTIP6702

Ordering information

[Part Number] **6RJI1200R741**

- 6: CM5 IP20 type
- R: Wired
- W: Wired＋WireIss(WiFi/Bluetooth)
- revision number
- Multi IO model

RAM[GB]	
2	2
3	4
4	**8 [standard]**
5	16

eMMC[GB]	
2	16
3	32
7	**64 [standard]**
8	64/SSD128GB
9	64/SSD256GB
A	64/SSD512GB
B	64/SSD1TB

Accessories	
0	**None [standard]**
1	Reserved
L	LTE
8	Hailo8
9	Hailo8L

Option(OPT) Interface	
1	**RS-232C[standard]**
2	I2C
3	RS-485

EXT. interface COM port, CAN port	
1	RS-232Cx1, CANx1port
2	**RS-485x1, CANx1port[standard]**
3	RS-232Cx1, CANx2port
4	RS-485x1, CANx2port

Add-on Software	
0	**None [fixed]**

All data given are in line with the actual state of art and therefore not binding.
PiLink reserves the right to modify designs without giving the relevant reasons.

All-in-one RFID reader

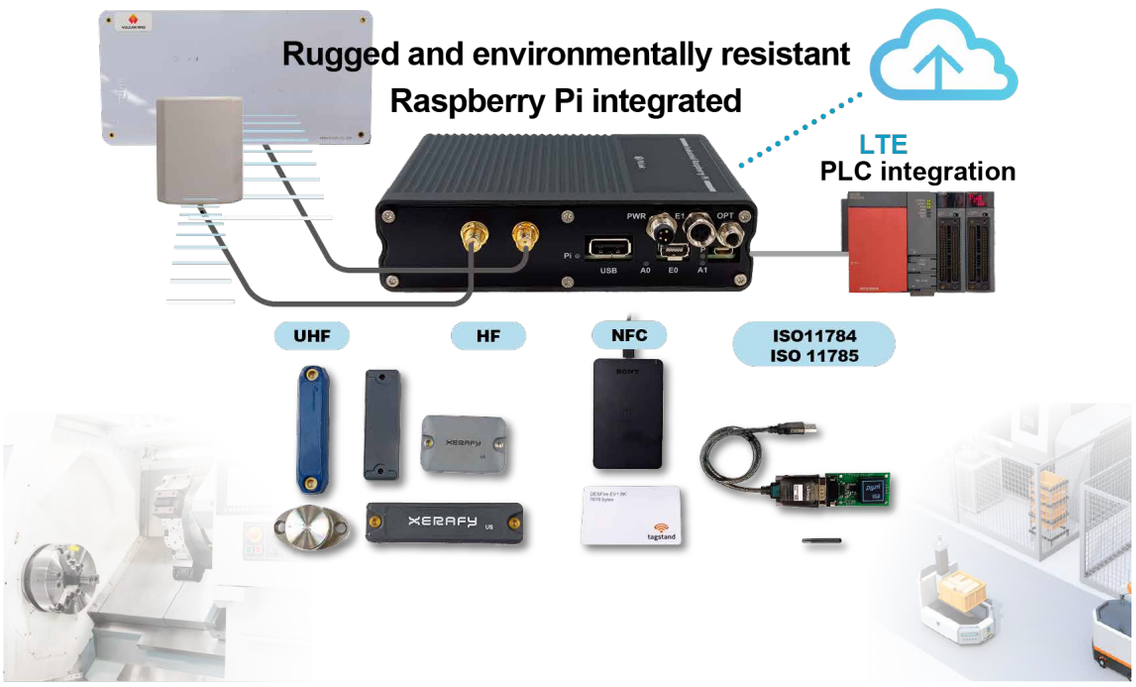

PC-less Raspberry Pi Integrated RFID Reader

The PL-R4 RFID IP20 integrated RFID reader, based on an industrial Raspberry Pi, operates independently without a PC. This significantly contributes to simplified system configuration, reduced installation space requirements, and cost savings. It also excels in the durability and stability demanded by industrial environments, making it suitable for harsh installation conditions.

Compatible with four RFID standards

The device supports the UHF band (860–960 MHz), HF band (13.56 MHz), NFC (Near Field Communication), and the ISO 11784/11785 standard used for animal identification. This enables the reading and writing of diverse RFID tags with a single unit. It covers diverse RFID needs across manufacturing, logistics, and other industries with a single device, enabling centralised management and improved maintainability through standardised equipment.

High scalability

The PL-R4 RFID IP20 can be optionally equipped with an M.2 SSD and WiFi/LTE communication capabilities. Adding the LTE communication option enables direct internet connectivity from the field, allowing flexible operation even in locations without established wired networks. Acquired RFID data can be transmitted, stored, and analysed in real time by integrating with cloud services such as AWS. This enables advanced RFID operations, including centralised management from remote locations, improved operational efficiency through data utilisation, and enhanced traceability.

RFID standard	UHF band (Ultra High Frequency)	HFband (High Frequency)	NFC (Near Field Communication)	ISO 11784/ISO11785 (Specification for Animal Individual Identification)
PL-R4 RFID IP20	All covered			
International standard	ISO/IEC 18000-6C (EPC Gen2)	ISO/IEC18000-3	ISO/IEC 14443, 18092	ISO 11784（Data structures） ISO 11785（Communication method）
Communication range	Long range Approximately several metres to 10 metres (depending on the environment)	Medium range Approximately several centimetres to one metre	Close range Several centimetres (typically under 10 cm)	Short distance Several centimetres to tens of centimetres
Features	Long-range communication Supports simultaneous reading of multiple tags	Stable Communication Somewhat resistant to the effects of metals and water	Two-way communication possible Supports communication between smartphones and devices	Highly durable identification applications Exceptionally resistant to metals and water
Frequency band	860MHz (Europe) 920MHz (United States and Japan）	13.56 MHz	13.56 MHz（Part of the HF band）	134.2 kHz (LF band)
Primary industrial applications	Railway and other moving object detection Automatic pallet identification	Fixture and component tracking Part identification and automatic component recognition	Worker authentication/attendance records, Equipment configuration changes, maintenance work records, etc.	AGV route determination/tracking control, Parts identification in metal and liquid environments
Communication speed	High speed (several hundred kbps and above)	Medium speed (tens to hundreds of kbps)	Medium speed（106 ～ 424 kbps）	Low speed（Several kbps）
Tag cost	Low-cost (for mass production)	Moderate	Moderate to expensive	Low to moderate

PL-R4 RFID IP20

Picture

Product Specifications

Processor		Broadcom BCM2711, Quad core @ 1.5GHz
Memory		RAM4GB, eMMC32GB (Depend on model)
OS		Raspberry Pi OS
Interface	Front	1x PWR : Power input, 2-line 2x LAN : FLAN 1ch, GLAN 1ch 1x OPT*1 : i2c/RS-232/485 selectable 1x USB : USB2.0 Host Type-A 1x Maintenance :Maintenance port(reserved) 2 x RFID : Antenna port for RFID Power-saving 250 mW EPC Global UHF Class 1 Gen2 [Option]1x WLAN IEEE 802.11 b/g/n/ac, Bluetooth 5.0, BLE [Option]1x LTE(M.2 slot/EM7431)
	Back	1x USB-C : USB Type-C(eMMC writing only) 1x SW : eMMC write switch 1x microSD : microSD slot
	Inter nal	1x M.2 slot B-key*2, 1x nanoSIM slot 1x CSI, 1xGPIO 40p
LED, Button		P: Power status, A0,1: LAN status Pi: User custom/WD error
RTC/NVRAM		BR1225[or CR1225] Backup RTC
Watchdog		Built-in hardware watchdog
Power/ Consumption		BASIC:DC10.7V...28.8V/ 12W(incl.USB 500mAx1)
Temperature		Operating Temp.: -20...60°C, Storage:-25...85°C
Humidity		Operating Humi.:0...95%(non-condensing)
IP grade		IP20
housing material		Aluminum powder coating
Dimensions		W132 x D87 x H35 mm (excluding protrusions)
Weight		BASIC:Approx.540g
Vibration/shock		IEC 60068-2-6 / IEC 60068-2-27
EMI		Radiated emissions EN55016-2-3
EMS		Electrostatic radiation immunity EN 61000-4-2
		Radio frequency electromagnetic fields EN 61000-4-3
		Fast transient burst EN 61000-4-4
Installation method		DIN rail mounting, wall mounting (Option)

Details of each part

<Front>

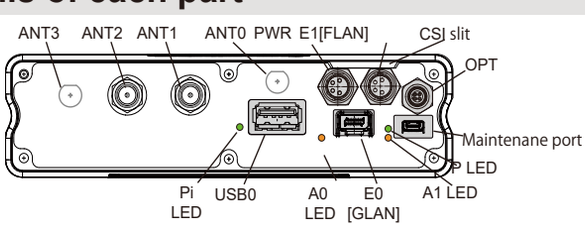

<Back>

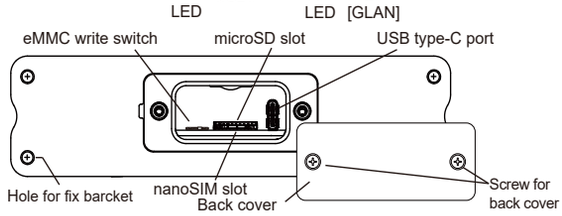

Features

- Industrial Raspberry Pi 4 (CM4)
- New processor, up to 2x faster than CM3
- Raspberry Pi OS compatible (Ubuntu requres 4GB or more RAM)
- Zebra Technologies RE40 UHF RFID chip [Technical Regulation No. 201-200451]
- Reading distance: up to 2 m
- Various antennas and industrial RFID tags are available (please contact us)
- DC12/24V power input
- Wide operating temperature range and high noise resistance
- M8, M5, ix connectors with high vibration resistance and connection reliability
- Robust aluminum die-cast housing
- Supports wall mount and DIN rail mount
- On-board eMMC (SD card is not used for boot)
- microSD slot for data storage
- Internal M.2 slot for SSD and WWAN expansion
- Raspi40p connector for expansion board
- Built-in battery backup RTC
- Highly reliable hardware watchdog

Interface

<Connector pin layout>

PWR connector

M8 A-coded 4pin Male

Pin	Col.	Signal
1	BR	24VDC(V1)
2	WH	24VDC(V2)
3	BL	0V(V1)
4	BK	0V(V2)

OPT connector

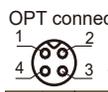

M5 4pin Female

Pin	Col.	i2c	RS232	RS485
1	BR	3.3V/5V/none*		
2	WH	SCL	TXD	A
3	BL	0V(RS232:SG)		
4	BK	SDA	RXD	B

*1 pin for power output is no output by default.

E0 connector [GLAN]

ix type-A jack

Pin	Signal	
	10/100M	1G
1	TX+	BI_DA+
2	TX-	BI_DA-
3	N.C.	GND
4	N.C.	BI_DC+
5	N.C.	BI_DC-
6	RX+	BI_DB+
7	RX-	BI_DB-
8	N.C.	GND
9	N.C.	BI_DD+
10	N.C.	BI_DD-

E1 connector [FLAN]

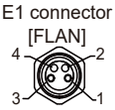

M8 A-coded 4pin Female

Pin	Col.	Signal
1	BR	TX+
2	WH	RX+
3	BL	RX-
4	BK	TX-

<LED>

LED	Sts.	Comments
P(GR)	Off	No power supply
	On	Power OK
A0(OR)	Blk	E0 active
A1(OR)	Blk	E1 active
Pi(RD)	Off	WD Normal
	On	WD Error
Pi(GR)	Off	User OFF
	On	User ON

<ANT SMA port> [Option]

Type	ANT2	ANT1	ANT0
Wired LAN	---	---	---
Wired LAN+LTE	Main	GNSS	Aux
Wired LAN+Wireless LAN	WL/BT	---	---
Wired LAN+Wireless LAN+LTE	Main	GNSS	WL/BT

<CSI>[Internal]

FPC connector

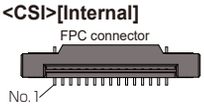

Pin	Signal	Pin	Signal
1	GND	9	CAM1_C_P
2	CAM1_D0_N	10	GND
3	CAM1_D0_P	11	CAM_GPIO
4	GND	12	NC
5	CAM1_D1_N	13	I2C1_SCL[GPIO45]
6	CAM1_D1_P	14	I2C2_SDA[GPIO44]
7	GND	15	3.3V
8	CAM1_C_N	16-30	NC

<GPIO>[Internal]

RasPi GPIO40pin (same layout as Raspberry Pi 40pin BM40B-SRDS-G-TF)

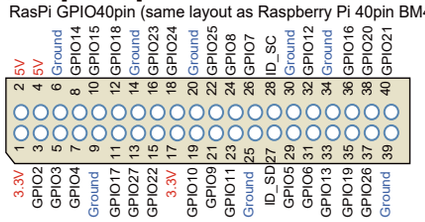

The GPIOs of CM4 are 3.3V level.

The total GPIO load is up to 50mA. For detailed specifications, please refer to the CM4 datasheet.

Ordering information

[Part Number] **2RRF1 0 0 0R 3 3 1** IP20 RFID model

- 2:CM4 IP20 type
- R :Wired
- W:Wireless
- revision number

RAM size [GB]	
1	1[not available]
2	2[not available]
3	4[standard]
4	8

Option (OPT) interface	
1	RS-232C[standard]
2	I2C
3	RS-485

Expansion interface	
0	None

Add-on software	
0	None

Accessory	
0	None[standard]
1	Reserved
L	LTE

eMMC size [GB]	
1	8
2	16
3	32[standard]
4	32/SSD128GB
5	32/SSD256GB
6	32/SSD512GB

All data given are in line with the actual state of art and therefore not binding.
PiLink reserves the right to modify designs without giving the relevant reasons.

Fault Monitoring and Predictive Maintenance

Various sensors

Vibration, current, temperature, strain, etc.

Web GUI application

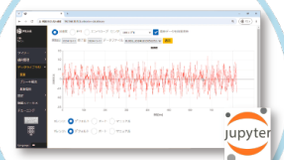

Free AI Tools
Programs also available

Wireless configuration is also possible

920 MHz band

MEMS sensing

This case study demonstrates fault diagnosis and predictive maintenance of a motor using a MEMS accelerometer incorporating the latest MEMS chip. The MEMS accelerometer attached to the motor can be connected directly to an industrial Raspberry Pi with an integrated STM32 microcontroller, or alternatively to a wireless sensor box.

In this project, measurement data is transmitted via a wireless sensor box (slave unit) using 920MHz sub-gigahertz band communication. The data, with a sampling interval of 50μs and approximately 20,000 measurement points per session, is sent at around 300kbps to a wireless base station (master unit) attached to an industrial Raspberry Pi. Measurements occur approximately five times daily. At this frequency, the wireless sensor box can operate for 3-5 years without battery replacement. Raw data received by the industrial Raspberry Pi undergoes real-time mathematical processing—including Fast Fourier Transform and envelope transformation—using the open-source software Scipy. This enables graph generation, fault detection, and transmission of data files to the upper-level system (the customer's server).

Despite not requiring a database of mechanical constants for each motor, it enables highly accurate pre-failure detection by continuously measuring and comparing fault evaluation indices from the normal state at start-up. The symptom monitoring application, including its source code, is freely available. This allows for customisation, such as modifying screen layouts, altering judgement algorithms, or adding machine learning logic.

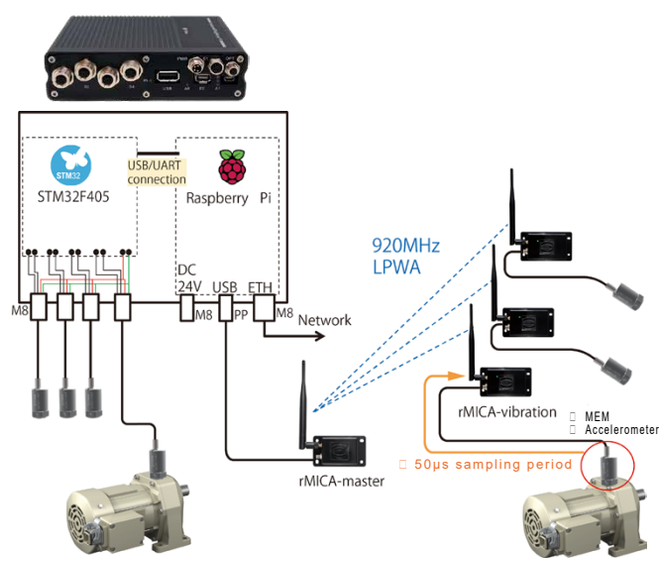

Next-generation wireless sensing

With the increasing adoption of IoT in manufacturing environments, there is a growing demand to implement wireless sensing for equipment dispersed across plants and factories. Furthermore, continuous measurement is often unnecessary for equipment condition monitoring and maintenance. Wireless solutions enable the monitoring of small-scale equipment where installation was previously difficult, by reducing both equipment and installation costs.

PiLink develops and sells wireless sensor network devices utilising the 920MHz band LPWA for the domestic market and the 860MHz band or 2.4GHz band (ZigBee) for overseas markets, tailored to each country's radio certification requirements. While LPWA's low data rate previously made transmitting large volumes challenging, our proprietary modulation scheme and retransmission/regeneration method enables transmission of approximately 20,000 sensor data points in around 5 seconds (at a transmission distance of 20–30 metres). Furthermore, through custom development tailored to customer requirements, it is possible to modify the transmitted data and transmission timing. For instance, if the client unit performs scoring assessments such as FFT and only transmits the assessment scores, the LoRa method can be selected. This method, while low-speed, enables transmission over distances of 500m to 1km.

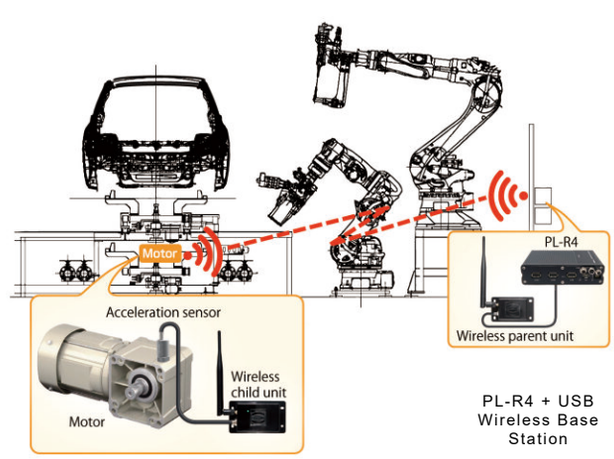

MEMS Accelerometer + Wireless Sensor Box

PL-R4 SENSOR IP20

Picture

Features

- Industrial Raspberry Pi 4(CM4)
- New processor, up to 2x faster than CM3
- Raspberry Pi OS compatible (Ubuntu requres 4GB or more RAM)
- DC12/24V power input
- Wide operating temperature range and high noise resistance
- M8, M5 connectors with high vibration resistance and connection reliability
- Robust aluminum die-cast housing
- Supports wall mount and DIN rail mount
- On-board eMMC (SD card is not used for boot)
- microSD slot for data storage
- M.2 slot inside SSD and WWAN expansion
- Raspi40p connector for expansion board
- Built-in battery backup RTC
- Highly reliable hardware watchdog

Product Specifications

Processor		Broadcom BCM2711, Quad core @ 1.5GHz
Memory		RAM4GB, eMMC32GB (Depend on model)
OS		Raspberry Pi OS
Interface	Front	1x PWR : Power input, 2-line 2x LAN : FLAN 1ch, GLAN 1ch 1x OPT*1 : i2c/RS-232/485 selectable 1x USB : USB2.0 Host Type-A 4x SENSOR1/2/3/4 : M8 8p Female 1x Maintenace port: System reserved [Option*2]1x WLAN IEEE 802.11 b/g/n/ac Bluetooth 5.0, BLE
	Back	1x USB-C : USB Type-C(eMMC writing only) 1x SW : eMMC write switch 1x microSD : microSD slot
	Internal	1x M.2 slot B-key*2, 1x nanoSIM slot 1x CSI, 1xGPIO 40p
LED, Button		P: Power status, A0,1: LAN status Pi: User custom/WD error
RTC/NVRAM		BR1225[or CR1225] Backup RTC
Watchdog		Built-in hardware watchdog
Power/ Consumption		GPIO:DC10.7V...28.8V/ 12W(incl. USB 500mAx1)
Temperature		Operating Temp.: -20～60°C, Storage:-25～85°C
Humidity		Operating Humi.:0～95%(non-condensing)
IP grade		IP20
housing material		Aluminum powder coating
Dimensions		W132 x D87 x H35 mm (excluding protrusions)
Weight		GPIO:Approx.610g
Vibration/shock		IEC 60068-2-6 / IEC 60068-2-27
EMI		Radiated emissions EN55016-2-3
EMS		Electrostatic radiation immunity EN 61000-4-2
		Radio frequency electromagnetic fields EN 61000-4-3
		Fast transient burst EN 61000-4-4
Installation method		DIN rail mounting, wall mounting(Option)

*1 The speed is variable, but data bits 8, parity N, and stop bits 1 are fixed.
*3 Please consult separately for wireless option.
*2 A 128GB SSD is installed as the default specification.
Not a full pin connection. USB2.0, PCIe, and SIM are connected.

Interface

<Connector pin layout>

PWR connector

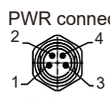

M8 A-coded
4pin Male

Pin	Col.	Signal
1	BR	24VDC(V1)
2	WH	24VDC(V2)
3	BL	0V(V1)
4	BK	0V(V2)

E0 connector
[GLAN]

ix type-A
jack

Pin	Signal	
	10/100M	1G
1	TX+	BI_DA+
2	TX-	BI_DA-
3	N.C.	GND
4	N.C.	BI_DC+
5	N.C.	BI_DC-
6	RX+	BI_DB+
7	RX-	BI_DB-
8	N.C.	GND
9	N.C.	BI_DD+
10	N.C.	BI_DD-

E1 connector
[FLAN]

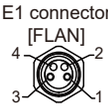

M8 A-coded
4pin Female

Pin	Col.	Signal
1	BR	TX+
2	WH	RX+
3	BL	RX-
4	BK	TX-

OPT connector

M5
4pin Female

Pin	Col.	i2c	RS232	RS485
1	BR	3.3V/5V/none*1		
2	WH	SCL	TXD	A
3	BL	0V(RS232:SG)		
4	BK	SDA	RXD	B

*1 pin for power output is no output by default.

Sensor S1/2/3/4 communication port

M8 A-coded
8pin Female

Pin	Signal
1	Connection confirmation
2	+5VA (5V analog voltage supply)
3	Vout (accelerometer analog voltage output)
4	GNDA (Analog GND)
5	I2C SCL
6	+3V3 (3.3V digital power supply for I2C)
7	I2C SDA
8	GNDD (Digital GND)

<LED>

LED	Sts.	Comments
P(GR)	Off	No power supply
	On	Power OK
A0(OR)	Blk	E0 active
A1(OR)	Blk	E1 active
Pi(RD)	Off	WD Normal
	On	WD Error
Pi(GR)	Off	User OFF
	On	User ON

<ANT SMA port> [Option]

Type	ANT2	ANT1	ANT0
Wired LAN	---	---	---
Wired LAN+LTE	---	---	---
Wired LAN+Wireless LAN	---	---	WL/BT
Wired LAN+Wireless LAN+LTE	---	---	---

<CSI>[Internal]

FPC connector

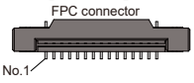

No.1

Pin	Signal	Pin	Signal
1	GND	9	CAM1_C_P
2	CAM1_D0_N	10	GND
3	CAM1_D0_P	11	CAM_GPIO
4	GND	12	NC
5	CAM1_D1_N	13	I2C1_SCL[GPIO45]
6	CAM1_D1_P	14	I2C2_SDA[GPIO44]
7	GND	15	3.3V
8	CAM1_C_N	16-30	NC

Details of each part

<Front>

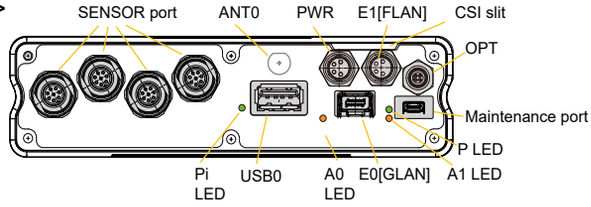

<Back>

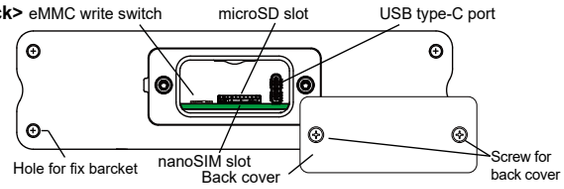

Ordering information

[Part Number] **2RSN1 0 0 0R 4 3 1**

R : Wired
W: Wireless

revision number

IP20 SENSOR model

RAM size [GB]	
1	1
2	2
3	4[standard]
4	8

eMMC size [GB]	
1	8
2	16
3	32
4	32/SSD128GB [standard]
5	32/SSD256GB
6	32/SSD512GB

4,5,6: NVMe fast SSD (Temperature 0-55°C)

Option (OPT) interface	
1	RS-232C[standard]
2	I2C
3	RS-485

Expansion interface	
0	None

Add-on software	
0	None[standard]

Accessory	
0	None[standard]

All data given are in line with the actual state of art and therefore not binding.
PiLink reserves the right to modify designs without giving the relevant reasons.

*This model is for the Signalling Monitoring Application (Wired Configuration). Specifications differ in part from models intended for general use.

USB wireless base station

rPL-master

(Unit: mm)

Base station for communicating with wireless sensor boxes.
Connects to host computers such as the PL-R4 via USB.

- Built-in 920MHz wireless module
- Features Semtech wireless chip for industry-leading 300kbps transmission (200m range).
- Compatible with frequency bands worldwide (separate radio certification required)
- USB-powered
- Dustproof and waterproof to IP65

■ Product Specifications

Model	rPL-master
Key chip	FTDI FT234XD-R, SEMTECH SX Series
Interface	M8 4-pin male x 1: USB 2.0 Type A RMA female x 1: External antenna
Power supply	Not required (USB-powered)
Protection rating	IP65
Authentication	Certificate of Conformity to Technical Standards (Wireless)
Wireless standard	Domestic 920MHz band sub-gigahertz standard
Radio channel	24（916MHz）～61（928MHz）
Wireless output (module)	20mW
Antenna	Non-directional 3dBi, RMA male
Host connection	USB 2.0 A
Housing	Flame-retardant ABS
Operating temperature range	-15 ～ 60℃
Dimensions WxHxD (mm)	100 x 24.5 x 59
Installation	4 x M4 screws

＜ Included Cable ＞
M8 A-type cable, 4-pin female to USB 2.0 Type A, 2m

Connect to the PL-R4 or other computers via USB

■Order Information

●Main unit

Order Information	Part number
USB Wireless Base Station rPL-master	RPLMSTR01

● Accessory: USB cable

USB cable (PL-R4, for connection to other computers)		Part number
M8 A-type connector, 4-pin, female to USB 2.0A [included]	2m	Please contact us

USB cable (for PL-R4 connection, waterproof specification)		Part number
M8 A-code, 4-pin, female to PushPull USB 2.0A	2m	Please contact us

PushPull USB
2.0A(Waterproof)

PL-R IP65 Type
For connection to PushPull USB ports

Wireless Sensor Box for Accelerometer

rPL-vibration

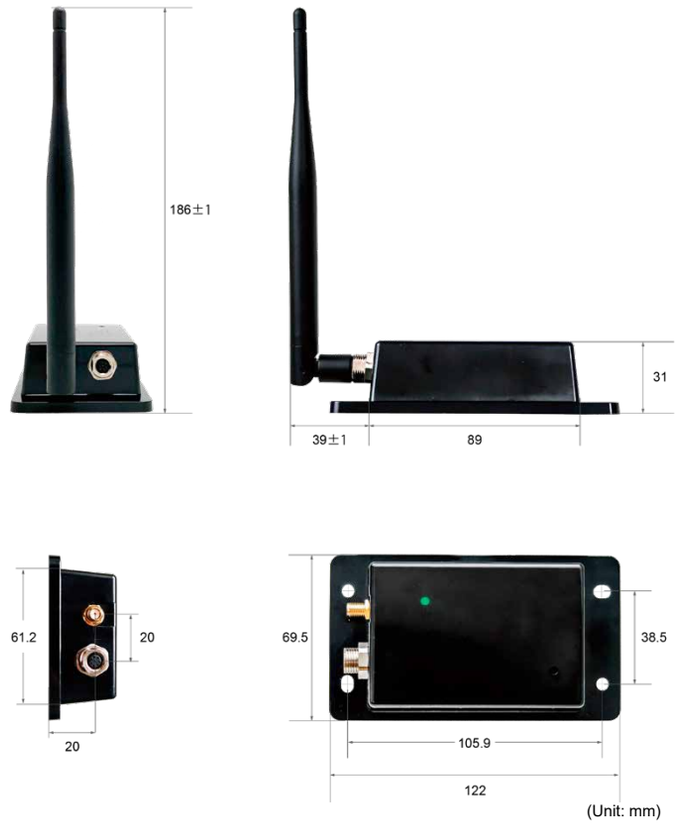

Processes measurements from the accelerometer probe and transmits them wirelessly to the host computer.

- Features ultra-low power STM32L4 microcontroller
- Utilises Semtech wireless chip for industry-leading 300kbps transmission (200m range)
- Compatible with global frequency bands (separate radio certification required)
- Battery-powered with built-in high-capacity, long-life battery
- Dustproof and waterproof to IP65 standard

■ Product Specifications

Model	rPL-vibration
Key chip	STM32 L432K, SEMTECH SX Series
Interface	M8 8-pin female x 1: Sensor input RMA female x 1: External antenna
Power supply	Built-in battery: 3.6 V, 13.5 Ah
Protection rating	IP65
Wireless standard	Domestic 920MHz band sub-gigahertz standard
Radio channel	24（916MHz）～61（928MHz）
Wireless output (module)	20mW
Antenna	Non-directional 3dBi, RMA male
Housing	Flame-retardant ABS
Authentication	Certificate of Conformity to Technical Standards (Wireless)
Operating temperature range	-15～60℃
Dimensions WxHxD (mm)	122 x 31 x 69.5
Installation	4 x M4 screws

■Order Information

●main unit

Product model	Part number
Wireless Box for Accelerometer Sensors rPL-vibration	RPLVIBR01

● Accessories

Product model	Part number
Accelerometer Sensor Wireless Sensor Box Battery	RPLBATR01

Analogue voltage output 0–10 kHz single-axis accelerometer

sPL-ACC

High-performance MEMS sensors enable high-precision measurement of vibrations from motors and similar equipment

- **Utilises the latest MEMS chips to achieve a measurement range exceeding 20,000 Hz and exceptionally low noise**
- **Ideal for motor fault diagnosis**
- **Incorporates a temperature sensor (I2C) and a low-speed 3-axis accelerometer (I2C)**
- **Dustproof and waterproof to IP66**
- **Connect and use with the industrial Raspberry Pi PL-R4 SENSOR or wireless sensor box rPL-vibration**

■ Product Specifications

Model / Part Number		sPL-ACC / SPLACCR01	
Probe		Installation Method	M6 screw
		Operating temperature range	-20 ～ 85℃
		IP rating	IP66
		Material	Hard anodised aluminium
		Dimensions	φ21.3 x 33.4mm (excluding protrusions and cables)
Included cable		Length	2m
		Connector	M8 8-pin male
Built-in sensor	Single-axis Accelerometer (Analogue voltage output)	Acceleration range	-10g～+10g
		Frequency range	0～10kHz(±10%)
		Noise level	25μg/√Hz
		Nominal sensitivity	40mV/g
		Temperature-dependent sensitivity variation	±2%
		Linearity error	0.1%FS
		Cross-axis sensitivity	-1～+1%
		Supply voltage	5V
	Temperature sensor (I2C output)	Temperature sensor range	-40～125℃
		Temperature sensor accuracy	±3℃ (-40～85℃)
		Resolution	10bits
		Supply voltage	3.3V
	Low-speed 3-axis Accelerometer (I2C output)	Acceleration range	2～16g
		Sample rate	1Hz
		Resolution	10bits
		0g offset error	－ 250～250mg
		0g offset temperature coefficient	±1.2mg/℃
		Linearity error	±0.5%FS
		Cross-axis sensitivity	-1～+1%
		Supply voltage	3.3V

● Probe dimensions

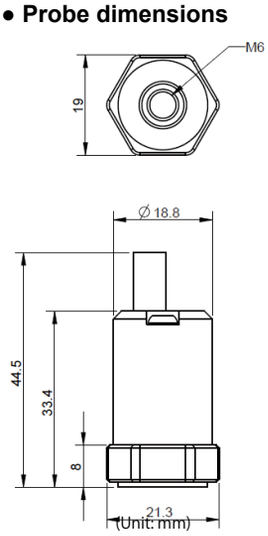

● Cable-attached M8 connector details

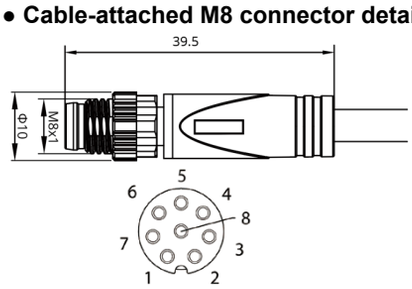

M8 8-pin male

Pin	Line colour		Traffic signal
1	Blue		Connection check
2	White	Blue	+5VA (5V analogue voltage supply/excitation)
3	Orange		Vout (Accelerometer analogue voltage output)
4	White	Orange	GNDA (Analogue GND)
5	Green		I2C SCL
6	White	Green	+3V3 (3.3V digital power supply for I²C)
7	Brown		I2C SDA
8	White	Brown	GNDD (Digital GND)

DC current sensor

sPL-CUR

Compact, space-saving, low-cost current sensor

- **Space-saving design with a width of 25.9mm**
- **Split-type for easy retrofitting**
- **DC30A, φ10mm**
- **Response time of 10μsec or less from 0 to rated current**
- **User-friendly +5V single-supply specification**

■ Product Specifications

Model/Part Number	sPL-CUR / PLCTF3010DC
Rated current	DC 30A
Maximum permissible current	DC 33A
Output voltage	DC +4.5V at +30A input DC +2.5V at 0A input DC +0.5V at -30A input
Wire gauge that can be fitted	Maximum diameter 10 mm
Accuracy	±2.0%F.S
Thermometer reading	±0.1%/℃
Response time	0→At rated current, 10 microseconds or less
Supply voltage	+5V ±5% (single supply)
Withstand voltage	AC 2000V/1 minute (between outer casing and output terminals)
Insulation resistance	DC 500V/100MΩ or more (between outer casing and output)
Operating temperature and humidity range / Operating humidity	-10 to 65°C / 85% RH or below (no condensation)
Reference Specifications	RoHS compliant
Cable	20cm (Connector: M8 8-pin male)
Wiring	Red: Power supply +5V White: Output OUT Shield: Power supply 0V / Output GND
Dimensions / Weight	W25.9×H65.2×D31.1mm / Approximately 36g

● External Dimensions Drawing

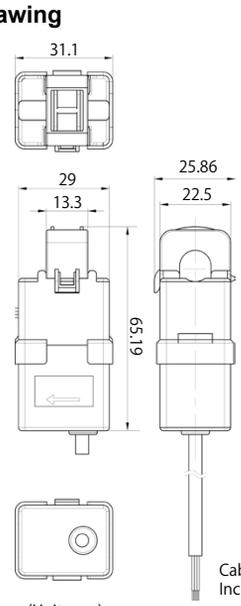

(Unit: mm)

Cable length: approx. 20cm
Includes M8 8-pin male connector

● M8 connector wiring with cable included

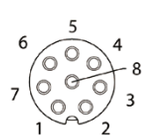

M8 8-pin male

Pin	wiring
1	NC
2	Red: Power supply +5V
3	White: Output OUT
4	Shield: Power 0V · Output GND
5	NC
6	NC
7	NC
8	NC

Key Accessories for the PL-R Series

■Power cable

Connect to the power supply (PWR) port

Power cable		Part number
M8 A-code, 4-pin, female to open-ended	2m	Ha-SAF4-2

■Start-up Power Supply Kit

This is a simple power supply for use during setup or maintenance.
For actual operation, please provide a separate industrial-grade DC24V power supply, such as a switching power supply.

General-purpose start-up power supply kit	Part number
DC24V AC adapter + DC jack	MRPOWK01

■LAN cable

・For E0 port
[1000Mbps]

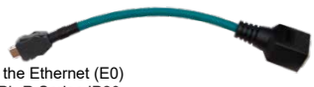

Connect to the Ethernet (E0) port of the PL-R Series IP20 model

Connect using a commercially available RJ45 cable

LAN cable		Part number
Type A plug to RJ45 jack	0.2m	T17001450IX
Type A plug to RJ45 plug	2m	IX10A12RJ45S

・For E1 port
[PL-R5:1000Mbps]
[PL-R4:100Mbps]

Connect to other PCs or other RJ45 devices

Ethernet (E1) port connection

PL-R5 LAN Cable for E1 Port [1000Mbps]		Part number
M8 A-code, 8-pin, male to RJ45 plug	2m	SAM82RJ45S
M8 A-code, 8-pin, male to RJ45 jack	0.2m	SAM802FRJ45S
PL-R4 LAN Cable for E1 Port [100Mbps]		**Part number**
M8 A-code, 4-pin, male to RJ45 plug	2m	SAM42RJ45S

■PushPull USB connection cable

Connect to other devices

Connect to the PushPull USB port of the PL-R5 IP65 model

Push-pull cable for USB connection		Part number
PushPull USB 2.0A to Standard USB 3.0 Type-A	2m	09454452913
PushPull USB 2.0A to Standard USB 2.0 Type-A	2m	09454451913

■OPT/IO cable

・For OPT ports (all models in the PL-R series)
・For IO ports (BASIC Plus IP65 models)

Optional cable		Part number
M5 4-pin, male to open-ended	2m	BAM-2S10HBK

■Sensor Cable for SENSOR Model

Connect to ports S1 to S4 of the SENSOR model

Sensor cable		Part number
M8, 8-pin, male to split	2m	T17000113

MEMS Sensor Extension Cable		Part number
M8, 8-pin male to M8, 8-pin female	3m	T17000130
	8m	T17000131

■PushPull Protective Cover

PL-R Series IP65 (waterproof) type for PushPull USB ports

PushPull USB Port Protective Cover	Part number
Short type (IP67)	09 45 845 0009
Long type (IP67)	09 45 845 0015
Simple cap (A cap that can be used by cutting a slit with a cutter to pass the cable through)	PPCAP01

■Dust cap

Waterproof dust cap for M5 and M8 connectors	Part number
For M8 male (PWR)	CAPM8M6701
For M8 female (E1 and SENSOR models S1 to S4)	CAPM8F6701
M5 female (for OPT and BASIC Plus IP65 model I/O ports) M5 Female (for OPT and BASIC Plus IP65 Model IO Ports)	CAPM5F6701

■For DIO Model, Multio IO Model Connection-side wiring tools and connectors for CN1, CN2 connectors

Wiring can be carried out using commercially available tools and connectors. Please prepare the following separately for reference.

Simple tools and connectors	
1. Crimping pliers Crimping Pliers	SN-01BM [IWISS]
2. Crimp terminals Crimping Pliers	BPHD-002T-P0.5 [JST]
3. Connector	1) CN1 PHDR-32VS [JST] 2) CN2 PHDR-20VS [JST]
4. Cable	AWG28-24 (Insulator outer diameter0.9-1.5mm)

Manufacturer tools and connectors	
1. Crimping tool	YRS-620 [JST]
2. Crimp terminals	SPHD-002T-P0.5 [JST]
3. Connector	1) CN1 PHDR-32VS [JST] 2) CN2 PHDR-20VS [JST]
4. Cable	AWG28-24 (Insulator outer diameter0.9-1.5mm)

■ LTE antenna

LTE antenna		Part number
LTE Monopole Antenna IP20 / TG.55.8113		LANTIP2001
LTE Flat Antenna IP67 / GSA.8835.A.101111	1m	LANTIP6701
LTE Magnetic Mount Antenna IP65 / GA.130.201111	2m	LANTIP6501
LTE 3-in-1 Antenna (GPS + 2x4G MIMO) IP67/ MA256.A.LBI.001	2m	LANTIP6702
LTE Waterproof Monopole Antenna IP67 L-Type / 1018-532A		LANTIP6703
LTE Waterproof Monopole Antenna IP67 Straight / 1018-531A		LANTIP6704

LTE monopole antenna
SMA Direct

Hinged (angle adjustable)
TG.55.8113

LTE Flat Antenna Flat Antenna
Application of seals to glass and resin surfaces

Cable 1 metre
GSA.8835.A.101111

LTE Magnetic Mount Antenna
Metal surface magnet attachment

Cable 2m
GA.130.201111

LTE 3-in-1 antenna
Glass and resin surfaces
Adhesive mounting

Cable 2m
MA256.A.LBI.001

LTE Waterproof Monopole Antenna
IP67 SAM Direct

L-shaped
1018-532A

Straight
1018-531A

■Mounting Adapter

Installation adapter	Part number
DIN rail mounting adapter	DINMNT01
Wall Mount Kit	WALMNT01

DIN rail adapter

Wall Mount Kit

CONTACT INFO

PiLink Inc.

〒222-0033

3-2-6 Shin-Yokohama, Kohoku Ward,
Yokohama City, Kanagawa Prefecture
VORT Shin-Yokohama, 9th Floor
TEL:045-286-5695

FAX:050-6883-8687

Mail:contact@pilink.jp

https://pilink.jp

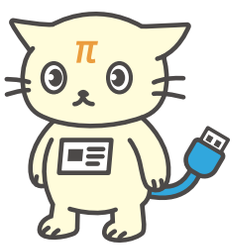

Pi-nyan

<Important Notice>

- The reproduction or unauthorised reproduction of the contents, images, or drawings contained in this catalogue is strictly prohibited.
- The product names, part numbers, specifications, and appearance of products featured in this catalogue are subject to change or discontinuation without prior notice due to improvements or other reasons.
- The colours of images may differ slightly from the actual products.
- When considering a purchase, please enquire about and confirm the latest product specifications.
- Whilst every effort has been made in compiling this catalogue, please note that we cannot be held liable for any damages arising from typographical errors, omissions, or delays in reflecting updated information.

<Trademarks>

- Raspberry Pi is a trademark of the Raspberry Pi Foundation.
- Other logos and product names appearing in this catalogue are trademarks or registered trademarks of their respective companies or organisations.

©2024 PiLink Co., Ltd. Industrial Raspberry Pi R5 Catalog v1.1 2025-11